Federal Register

Wednesday,
June 20, 2007

Part II

Architectural and Transportation Barriers Compliance Board

36 CFR Part 1195

Architectural Barriers Act (ABA) Accessibility Guidelines for Outdoor Developed Areas; Proposed Rule

ARCHITECTURAL AND TRANSPORTATION BARRIERS COMPLIANCE BOARD

36 CFR Part 1195

[Docket No. 2007–02]

RIN 3014–AA22

Architectural Barriers Act (ABA) Accessibility Guidelines for Outdoor Developed Areas

AGENCY: Architectural and Transportation Barriers Compliance Board.

ACTION: Notice of proposed rulemaking.

SUMMARY: The Architectural and Transportation Barriers Compliance Board (Access Board) is proposing to issue accessibility guidelines for outdoor developed areas designed, constructed, or altered by Federal agencies subject to the Architectural Barriers Act of 1968. The guidelines cover trails, outdoor recreation access routes, beach access routes, and picnic and camping facilities.

DATES: Comments should be received by October 18, 2007. The Access Board will hold hearings on July 24, 2007 from 2 p.m. until 5 p.m. and on September 6, 2007 from 2 p.m. until 5 p.m.

ADDRESSES: You may submit comments, identified by Docket No. 2007–02, by any of the following methods:

- *Federal eRulemaking Portal: http://www.regulations.gov.* Follow the instructions for submitting comments.
- *E-mail: outdoor@access-board.gov.* Include Docket No. 2007–02 in the subject line of the message.
- *Fax:* (202) 272–0081.
- *Mail or Hand Delivery:* Office of Technical and Information Services, Architectural and Transportation Barriers Compliance Board, 1331 F Street, NW., suite 1000, Washington, DC 20004–1111.

All submissions received must include the agency name and docket number for this rulemaking. All comments received will be posted without change to *http://www.access-board.gov*, including any personal information provided. Comments will also be available for inspection at the above address from 9 a.m. to 5 p.m. on regular business days. The hearing on July 24, 2007 will be held at the Westin Westminster, 10600 Westminster Boulevard, Westminster, CO 80020; the hearing on September 6, 2007 will be held at the Madison Hotel, 1177 Fifteenth Street, NW., Washington, DC 20005.

FOR FURTHER INFORMATION CONTACT: Bill Botten, Office of Technical and Information Services, Architectural and Transportation Barriers Compliance Board, 1331 F Street, NW., suite 1000, Washington, DC 20004–1111. Telephone number (202) 272–0014 (Voice); (202) 272–0082 (TTY). These are not toll-free numbers. E-mail address: *botten@access-board.gov.*

SUPPLEMENTARY INFORMATION:

Availability of Copies and Electronic Access

Single copies of this publication may be obtained at no cost by calling the Access Board's automated publications order line (202) 272–0080, by pressing 2 on the telephone keypad, then 1 and requesting publication S–65 (Outdoor Developed Areas Notice of Proposed Rulemaking). Please record your name, address, city, State, zip code, telephone number and request publication code S–65. Persons using a TTY should call (202) 272–0082. This document is available in alternate formats upon request. Persons who want this publication in an alternate format should specify the type of format (cassette tape, Braille, large print, or ASCII disk). This document is also available on the Board's Web site (*http://www.access-board.gov*).

Background

The Architectural and Transportation Barriers Compliance Board (Access Board) is responsible for developing accessibility guidelines to ensure that new construction and alterations of facilities subject to the Americans with Disabilities Act of 1990 and the Architectural Barriers Act of 1968 are readily accessible to and usable by individuals with disabilities. The Americans with Disabilities Act applies to State and local government facilities, places of public accommodation, and commercial facilities. The Architectural Barriers Act applies to federally financed facilities.

The Access Board has developed accessibility guidelines for buildings and various other facilities subject to the Americans with Disabilities Act and the Architectural Barriers Act. The Access Board recently revised the Americans with Disabilities Act and the Architectural Barriers Act Accessibility Guidelines in 2004. 69 FR 44084 (July, 23, 2004). The revised accessibility guidelines are codified at 36 CFR Part 1191, Appendices A through E, and are available at the Access Board's Web site (*http://www.access-board.gov/ada-aba/final.htm*). The revised accessibility guidelines include scoping and technical provisions for several types of recreation facilities, including recreational boating facilities, fishing piers and platforms, golf facilities, play areas, and swimming pools. However, the revised accessibility guidelines do not address access to such outdoor developed areas as trails, beaches, and picnic and camping facilities.

The Access Board convened a Recreation Access Advisory Committee in 1993 as the first step in developing accessibility guidelines for outdoor developed areas and other recreation facilities. The advisory committee presented its report in 1994, and the Access Board issued an Advance Notice of Proposed Rulemaking (ANPRM) the same year requesting public comment on the committee's recommendations. 59 FR 48542 (September 21, 1994). The public comments revealed a lack of consensus on some major issues regarding outdoor developed areas.

The Access Board subsequently established a regulatory negotiation committee in 1997 to propose accessibility guidelines for outdoor developed areas.[1] Regulatory negotiation is a supplement to the traditional rulemaking process that allows for face to face negotiations among representatives of affected interests, including the agency, with a goal of reaching consensus on a proposed rule. The proposed rule is then published in the **Federal Register** and the public has an opportunity to comment. Based on public comments received, the final rule may differ from the proposed rule. The regulatory negotiation committee reached consensus on proposed accessibility guidelines for outdoor developed areas, and presented its report to the Access Board in 1999. The regulatory negotiation committee's report is available at the Access Board's Web site (*http://www.access-board.gov/outdoor/outdoor-rec-rpt.htm*).

Federal agencies are required to assess the impacts of proposed rules and final rules, and prepare detailed analyses of

[1] The following organizations were represented on the regulatory negotiation committee: American Society of Landscape Architects; American Camping Association; American Trails; Appalachian Trail Conference; Association of Blind Athletes; Hawaii Commission on Persons with Disabilities; KOA, Inc.; National Association of State Park Directors; National Association of State Trail Administrators; National Center on Accessibility; National Council on Independent Living; National Recreation and Park Association; National Spinal Cord Injury Association; New York State Department of Environmental Conservation; Paralyzed Veterans of America; Partners for Access to the Woods; Rails to Trails Conservancy; State of Washington, Interagency Committee for Outdoor Recreation; TASH; U.S. Army Corps of Engineers; U.S. Department of Agriculture, Forest Service; U.S. Department of Interior, National Park Service; U.S. Department of Transportation, Federal Highway Administration; U.S. Access Board; and Whole Access.

the costs and benefits of the rules if the impacts are economically significant.[2] Sufficient data is not presently available for the Access Board to assess the impacts of the proposed accessibility guidelines for outdoor developed areas on State and local governments and private entities. Consequently, the Access Board has decided to limit this proposed rule to outdoor developed areas designed, constructed, or altered by Federal agencies subject to the Architectural Barriers Act. At a future date, when an assessment of the impacts on State and local governments and private entities can be prepared, the Access Board will conduct a separate rulemaking for outdoor developed areas subject to the Americans with Disabilities Act.

The proposed rule will primarily affect the following Federal land management agencies and their components: Department of Agriculture (Forest Service); Department of Interior (National Park Service, Fish and Wildlife Service, Bureau of Land Management, and Bureau of Reclamation), and Department of Defense (Army Corps of Engineers). In May 2006, the Forest Service published a notice of a final directive that requires compliance with the Forest Service Outdoor Recreation Accessibility Guidelines (FSORAG), 71 FR 29288 (May 22, 2006), and the Forest Service Trail Accessibility Guidelines (FSTAG) 71 FR 29294 (May 22, 2006). The FSORAG and FSTAG provide accessibility direction for outdoor developed recreation areas in the National Forest System. When the Board finalizes its accessibility guidelines for outdoor developed areas, the Forest Service will revise the FSORAG and FSTAG as needed to incorporate the Board's guidelines.

The proposed accessibility guidelines in the regulatory negotiation committee's report followed the format and numbering system of the Americans with Disabilities Act Accessibility Guidelines that was initially issued by the Access Board in 1991. As indicated earlier, the Access Board revised the Americans with Disabilities Act and the Architectural Barriers Act Accessibility Guidelines in 2004. The revised accessibility guidelines use a new format and numbering system. The proposed rule follows the new format and numbering system of the revised accessibility guidelines. The proposed rule has also been edited to conform to the style of the revised accessibility guidelines. The substance of the proposed rule is the same as in the regulatory negotiation committee's report.

The proposed rule is presented as a ''stand alone'' document. The proposed rule consists of four chapters. Chapter T1 contains general provisions. Chapter T2 contains scoping provisions for trails, outdoor recreation access routes, beach access routes, picnic and camping facilities, and elements associated with those facilities. Chapter T3 contains technical provisions that are unique to the items scoped in Chapter T2. Chapter T4 contains supplementary technical provisions that are common to all facilities such as turning space, reach ranges, operable parts, and doors, and are also applicable to the items scoped in Chapter T2. Chapter T4 also adapts the technical provisions for toilet facilities to apply to pit toilets. Facilities and elements such as visitor centers, parking lots, plumbed toilets and bathing facilities, drinking fountains, recreational boating facilities, and fishing piers and platforms that are covered by the Architectural Barriers Act Accessibility Guidelines issued in 2004 are not included in this proposed rule. A provision has been added to Chapter T2 (T201.4) requiring facilities and elements covered by the Architectural Barriers Act Accessibility Guidelines to comply with those guidelines.

The Board invites comment on the format of the proposed rule and other format recommendations for the final rule.

Access Board Questions

The Board requests comments on the following questions related to the accessibility guidelines proposed by the Regulatory Negotiation Committee.

Question 1: The Board acknowledges the difficulty in reaching consensus on proposed accessibility guidelines for newly constructed and altered trails and appreciates the hard work of the regulatory negotiation committee. Throughout the committee's deliberations, several alternative approaches to addressing trail accessibility were considered. Some of the approaches considered and rejected included applying different provisions to ''front'' country and ''back'' country trails; general exemptions from accessibility in some areas; different provisions based on levels of development; and requiring only a certain percentage of new trails to be accessible. A summary of the committee's deliberations on these approaches is included in the preamble under the section on trails (T203). The committee reached consensus on the approach presented in this proposed rule. Should the approaches that were rejected be reconsidered? Are there other approaches the Board should consider? If so, please provide information on how the alternative approaches would be applied and their rationale.

Question 2: The proposed guidelines include conditions for exceptions from the technical provisions (T302). Condition 4 permits specific exceptions to the technical provisions for trails where compliance would not be feasible due to terrain or prevailing construction practices. The term ''not feasible'' is used in Condition 4 to specify what is ''reasonably do-able.'' It does not refer to the technical infeasibility or possibility of full compliance with the technical provisions. Should the word ''practicable'' also be used in this condition? That is, are there situations where it would be ''reasonably do-able'' to comply with the guidelines, but it is not ''practicable'' to do so? Should there be more guidance for determining what is or is not feasible or practicable in applying Condition 4? If so, what type of guidance should be provided? Should the guidance give specific examples of situations where certain provisions such as maximum running slope may not be feasible or practicable for a portion of a trail?

Question 3: A newly constructed trail that complies with the technical provisions for trails would be considered an accessible trail and is required to display a symbol designating the trail as accessible. The committee did not reach consensus on what symbol should be displayed on the sign. Some suggested that the International Symbol of Accessibility that is used to designate accessible features in buildings was not appropriate to designate accessible trails because the technical provisions for trails differ from the technical provisions for accessible routes in buildings, and using the International Symbol of Accessibility for accessible trails may convey the message that accessible trails meet the same technical provisions as accessible routes in buildings. Others suggested that the International Symbol of Accessibility be paired with the International Hiker Symbol. Comments on this suggestion or other suggested symbols are welcome.

The committee also recommended that trail signs provide detailed information about the trails' running

[2] A rule is considered economically significant if it may have ''an annual effect on the economy of $100 million or more, or adversely affect in a material way the economy, a sector of the economy, productivity, competition, jobs, the environment, public health or safety, or State, local, or tribal governments or communities.'' Executive Order 12866, section (f)(1).

slope, width, cross slope, and other characteristics. This would enable people to make informed decisions about using trails based on the characteristics of the trails. On the other hand, it was noted that this approach might result in signs that would be too elaborate and complicated, and some hikers might not be able to distinguish between the various characteristics to make appropriate choices. The Board requests comment on this issue. Information is provided in the advisory note to T321.2 showing examples of signs and other details. Question 25 also requests further comment on trail signage.

Question 4: The committee proposed that a beach access route be required where pedestrian routes are provided to or along the edge of a beach. Several exceptions to this general requirement are included in the proposed rule. Section T205.2.3 Exception 6 provides an exception for pedestrian routes that are developed along the edge of an existing beach, such as a boardwalk. Under this exception, beach access routes would not be required if the pedestrian route or boardwalk is elevated 6 inches or higher above the beach surface. The Board is concerned that this exception will not provide sufficient access for persons with disabilities, especially where lengthy elevated boardwalk systems are provided. In view of this, the Board requests comments on whether a higher threshold than 6 inches should be used.

Question 5: The proposed rule requires beach access routes to be a minimum of 36 inches in width. Should this width be increased? When beach access routes are less than 60 inches in width, a passing space of 60 inches by 60 inches would be required every 200 feet. Should the passing space be larger? Should passing spaces be provided more frequently than every 200 feet? The Board is interested in information from designers or operators who have provided beach access routes.

Question 6: The proposed rule requires beach access routes to extend to the water. The Board requests comments on whether beach access routes should connect managed elements and spaces often located on a beach such as beach volleyball courts, first aid stations, beach rental equipment facilities, and concession stands.

Question 7: The proposed rule (T308.3) requires the height of the cooking surface of a grill to be 15 inches minimum to 34 inches maximum above the floor or ground surface. Is the 15 inch minimum height too low? If so, what dimension should be used and why?

Question 8: The number of picnic tables, grills, benches, and other elements required to be accessible in this proposed rule is based on what is provided in an area. While no definition of area is provided, several examples are included in the advisory note to T206.2.2 to give guidance on what is intended. Areas may be ''designated locations'', separated and identified by a name or connected to a separate entrance road. Areas may also be separated and include different settings on the same site. For example, a picnic area located next to a lake in a park is considered a separate picnic area from a pavilion with numerous picnic tables within the same park. Does the term ''area'' need to be defined? If so, please provide a recommended definition.

Question 9: Extensive information is included in the advisory note to T303.3 (Table A) on the degree of firmness and stability of a trail surface. The Board is seeking comment on whether the recommendations for the degree of surface firmness and stability should be based on the length of travel, the intended use, or the direction of traffic. For example, surfaces that are moderately firm or stable may be appropriate in areas where a cushioned surface is preferred (*e.g.*, for a multi-use trail that includes equestrians).

The Board requests comment on the concept of having a range of requirements for what will qualify as firm and stable. For example, is it acceptable for a trail under .5 miles in length to be only ''moderately'' firm? Is it acceptable for a trail less than .1 miles in length to be only ''moderately'' firm and ''moderately'' stable? Further, is it appropriate to consider a surface firm if the wheel of a wheelchair sinks into it by .5 inch? And, is it appropriate to measure both firmness and stability by the same wheelchair penetration test? While this information is only advisory, the Board requests comments on whether it should be included in the advisory at all.

Question 10: Should the number of required accessible outdoor elements such as picnic tables, fire rings, and benches be increased from the scoping provisions in Chapter T2? In most cases, 50% of the elements provided are required to be accessible. Of those elements required to be accessible, 40% are also required to be connected by an outdoor recreation access route. The Board is interested in comments and alternatives to the scoping provisions for these elements.

Question 11: The guidelines issued by the Board in 2004 include changes to the technical provisions for reach ranges. The high side reach was changed from 54 inches to 48 inches maximum. Additionally, the low reach was changed from 9 inches to 15 inches minimum. These revised reach range provisions are included in Chapter T4. However, the proposed low reach for the fire building surface on fire rings was unchanged. The Board did not modify this provision since the regulatory negotiation committee specifically addressed the 9 inch minimum for this element. The Board is interested in comment on the application of the revised reach ranges to the various controls and operating mechanisms addressed in this proposed rule.

General Issues

The remainder of the preamble is from the report of the Regulatory Negotiation Committee.

Alterations and Maintenance

Alterations and maintenance of trails were discussed extensively by the committee. As a result of these discussions, guidance in determining when actions would be considered ''maintenance'' or an ''alteration'' was needed. Where actions are considered an alteration, certain technical provisions will apply. There are no obligations to follow any technical provisions where the actions are considered maintenance or repair.

Routine or periodic maintenance or repair of existing trails or trail segments is exempt from scoping and technical provisions for accessible trails. Maintenance and repair is performed to return a trail or trail segment back to the standards or conditions to which it was originally designed and built. In outdoor environments, the ability to maintain a facility is generally more limited, occurring relatively infrequently, except in highly developed areas. This type of work is not an alteration; it does not change the original purpose, intent, or design of the trail. The act of maintenance and repair includes, but is not limited to:

- Removal of debris and vegetation such as downed trees or broken branches in the trailway, clearing a trail of encroaching brush or grasses, and removing rock slides;
- Maintenance of the trail tread such as filling ruts and entrenchments, reshaping trail beds, repairing trail surfaces and washouts; installing rip rap (rock placed to retain cut and fill slopes), and constructing retaining walls or cribbing to support the trail tread;
- Erosion control and drainage, replacing or installing necessary drainage structures such as drainage dips, water bars, or culverts, and

realigning sections of trail to deter erosion or avoid boggy or marshy areas; and

• Repair of trail or trailhead structures, including replacing deteriorated, damaged, or vandalized parts of structures such as sections of bridges, boardwalks, information kiosks, fencing, railings, and painting or removing graffiti.

Where practicable and feasible, resource managers are encouraged to maximize the opportunity to improve accessibility on trails through trail maintenance and repair activities. Every time a trail is maintained, the opportunity to improve access is present.

Question 12: The committee recognized that the distinction between alterations and maintenance activities is as critical to picnic areas, campgrounds, and beaches as it is to trails. Although the previous discussion specifically refers to trails, the examples could be extrapolated to include other outdoor elements. How should alteration and maintenance activities be defined for picnic areas, campgrounds, and beaches, including outdoor recreation access and beach access routes?

Question 13: Should there be different construction tolerances for the outdoor environment? For example, should the construction tolerances be greater with respect to trails, picnic areas, camping facilities, and beach access routes than interior accessible routes? If so, how should those tolerances be defined?

Relationship Between Use of All Terrain Vehicles (ATVs) and the Proposed Accessibility Guidelines for Trails

During the committee deliberations, some individuals expressed concern that applying the proposed accessibility guidelines to trails in the ''back country'' or lesser developed portions of outdoor recreation areas would make it more difficult for public land managing agencies to appropriately manage the use of all terrain vehicles (ATVs) and off highway vehicles (OHVs) in these areas. One concern was that requiring land managing agencies to consider making trails in lesser developed areas accessible according to the proposed guidelines would make it more difficult to control and restrict where these types of devices may be used.

The proposed guidelines for trails address their design, construction, and alteration in the same manner that other accessibility provisions address fixed facilities. They are similarly based on the dimensions and use patterns of those assistive devices commonly referenced throughout the Board's guidelines. While in the outdoor environment it may be possible to encompass a wider variety of mobility enhancing equipment, the necessity of protecting the environment and maintaining the appropriateness of the setting might exclude certain devices, particularly ATVs or OHVs. That decision is reserved for the administrative agency or owner of the affected property and is beyond the scope of these guidelines.

Trails Used as Transportation Facilities (Shared Use Paths)

Many trails are used as non-motorized transportation facilities. Users may include bicyclists and skaters as well as pedestrians. These accessibility guidelines apply to these trails. However, bicyclists and skaters have design needs which exceed the minimum guidelines for trails. A trail designed only to meet the proposed accessibility guidelines for trails may not be adequate, and possibly hazardous for bicyclists or skaters.

The primary design guide for bicycle and shared use facilities is the ''Guide for the Development of Bicycle Facilities'' from the American Association of State Highway and Transportation Officials (AASHTO), 1999. The AASHTO Guide defines a ''shared use path'' as a facility on exclusive right-of-way and minimal cross flow by motor vehicles. Users generally include bicyclists, skaters, and pedestrians. (In areas with heavy snow, shared use paths may be used by cross-country skiers or snowmobilers.) A summary of how the AASHTO Guide relates to the proposed accessibility guidelines for trails is provided. In most cases, the AASHTO Guide requires a greater level of accessibility when designing trails for pedestrians, including bicyclists and skaters.

Shared use paths provide non-motorized transportation connections between neighborhoods and communities. They may be along old railroad corridors or rivers, or pass through parks. Shared use paths are usually separated from adjoining roadways or streets either by distance or a barrier, and are usually distinct from sidewalks. They generally have relatively few driveways or street crossings. A summary of how the AASHTO Guide relates to the proposed accessibility guidelines for trails is included below. Trails designed for recreational use by mountain bicyclists are not expected to meet AASHTO Guidelines.

COMPARISON OF AMERICAN ASSOCIATION OF STATE HIGHWAY AND TRANSPORTATION OFFICIALS (AASHTO) GUIDELINES FOR BICYCLE FACILITIES AND THE PROPOSED GUIDELINES FOR TRAILS

Outdoor developed areas accessibility guidelines	AASHTO guide for the development of bicycle facilities
T303.3 Surface: Firm and stable	Bicycles need the same firmness and stability as wheelchairs; skaters usually require a smooth, paved surface. Most shared use paths are paved, although crushed aggregate surfaces are used on some paths.
T303.4 Clear Tread Width: 36 inches (3 feet; 915 mm); exception for 32 inches (815 mm).	Shared use paths usually require a minimum 3 meter (10 foot) width, plus a 0.6 meter (2 foot) safety buffer on both sides. A 2.4 m (8 foot) width may be allowed in low use facilities. Posts or bollards installed to restrict motor vehicle traffic should be spaced 1.5 m (5 feet) apart. Posts or bollards should be brightly painted and reflectorized for visibility. When more than one post is used, use an odd number, with one on the centerline to help direct opposing traffic.
T303.5 Openings (Gaps): To prevent wheelchair wheels and cane tips from being caught in surface openings or gaps, openings in trail surfaces shall be of a size which does not permit passage of a ½ inch (13 mm) diameter sphere; elongated openings must be perpendicular or diagonal to the direction of travel; exception to permit parallel direction elongated openings if openings do not permit passage of a ¼ inch (6 mm) sphere; second exception to permit openings which do not permit passage of a ¾ inch (19 mm) sphere.	The AASHTO Guide does not specify a maximum dimension for a surface opening, but openings should be minimized. Openings should not permit a bicycle wheel to enter. Grates should be flush with the surface, and elongated openings should be perpendicular to the direction of travel (diagonal openings are more difficult for bicyclists to negotiate). Where openings are unavoidable, they should be clearly marked.

COMPARISON OF AMERICAN ASSOCIATION OF STATE HIGHWAY AND TRANSPORTATION OFFICIALS (AASHTO) GUIDELINES FOR BICYCLE FACILITIES AND THE PROPOSED GUIDELINES FOR TRAILS—Continued

Outdoor developed areas accessibility guidelines	AASHTO guide for the development of bicycle facilities
T322.1 Protruding Objects:T405 provide a warning if vertical clearance is less than 80 inches (2030 mm).	Protruding objects should not exist within the clear tread width of a shared use path. Vertical clearance on shared use paths should be a minimum of 3 m (10 feet) or the full clear width including safety buffers. Where vertical barriers and obstructions, such as abutments, piers, and other features are unavoidable, they should be clearly marked.
T303.6 Tread Obstacles (Changes in level, roots, rocks, ruts): Up to 2 inches (50 mm); exception up to 3 inches (75 mm).	Tread obstacles are hazardous to bicyclists and skaters. The surface of a shared use path should be smooth and should not have tread obstacles.
T303.7 Passing Space: At least 60 inches (1525 mm) width within 1,000 foot (300 m) intervals. Advisory recommends more frequent intervals for some trail segments.	Shared use paths should have a minimum clear width of 3 m (10 feet); exception for 2.4 m (8 feet).
T303.8.1 Cross Slope: 1:20 (5%) maximum; exceptions for open drains up to 1:10 (10%).	For drainage, shared use paths should have a minimum 2 percent (1:50) cross slope on a paved surface. On unpaved shared use paths, particular attention should be paid to drainage to avoid erosion. Curves on shared use paths may require super elevation beyond 2% (1:50) for safety reasons. The Guide suggests limited cross slope for accessibility reasons.
T303.8.2 Running Slope: 1:20 (5%), any length; 1:12 (8.33%), for up to 200 feet; 1:10 (10%), for up to 30 feet; 1:8 (12.5%), for up to 10 feet. No more than 30% of the total trail length shall exceed 1:12.	Running slopes on shared use paths should be kept to a minimum; grades greater than 5 percent are undesirable. Grades steeper than 3 percent may not be practical for shared use paths with crushed stone or other unpaved surfaces. Where terrain dictates, grade lengths are recommended as follows: <5% (<1:20), any length; 5–6% (1:20–16.7), for up to 240 m (800 feet); 7% (1:14.3), for up to 120 m (400 feet); 8% (1:12.5), for up to 90 m (300 feet); 9% (1:11.1), for up to 60 m (200 feet); 10% (1:10), for up to 30 m (100 feet); 11+% (1:9.1), for up to 15 m (50 feet).
T303.9 Resting Intervals: Size: 60 inch (1525 mm) length, at least as wide as the widest trail segment adjacent to the rest area. Less than 1:20 (5%) slope in all directions. Resting areas are required where trail running slopes exceed 1:20 (5%), at intervals no greater than the lengths permitted under running slope (see T302.6.2 above).	The Guide does not address resting intervals.
T303.10 Edge Protection: Where provided, 3 inch (75 mm) minimum height. Handrails are not required.	The Guide does not address edge protection. Some kinds of edge protection may be hazardous to bicyclists and skaters. The Guide has minimum railing height recommendations when needed for safety reasons.
T222 Trail Signs: Accessible trails require designation with a symbol of accessibility, and information on total length of the accessible segment. No traffic control sign information.	Guidance on signing and marking is provided in the Manual on Uniform Traffic Control Devices (MUTCD), incorporated by reference as a Federal regulation (23 CFR 655.601). A proposed amendment for Part 9 (Traffic Controls for Bicycle Facilities) was published in the **Federal Register** on June 24, 1999 (64 FR 33802).

The ''Guide for the Development of Bicycle Facilities'' is available through the American Association of State Highway and Transportation Officials (AASHTO), 444 North Capitol Street, NW., Suite 249, Washington, DC 20001, (202) 624–5800, fax (202) 624–5806, *https://bookstore.transportation.org/*

Section-by-Section Analysis

This section of the preamble contains a summary of the proposed accessibility guidelines for trails, outdoor recreation access routes, beach access routes, and picnic and camping facilities. The text of the proposed rule follows this section.

Chapter T1: Application and Administration

This chapter states general principles that recognize the purpose of the guidelines (T101), modification and waivers (T102), conventions (T103), and definitions (T104).

T102 Modifications and Waivers

The Architectural Barriers Act (ABA) authorizes certain agencies to grant a modification or waiver from the scoping and technical provisions upon a case-by-case determination.

T103 Conventions

All dimensions not stated as a ''maximum'' or ''minimum'' are absolute and are subject to conventional industry tolerances except where a range is provided. Rules are provided for calculations of percentages.

T104 Definitions

Definitions for ''alterations'' and ''facility'' have been added by the Board to this proposed rule and are based on definitions in the Architectural Barriers Act Accessibility Guidelines issued in 2004. The other definitions are from the regulatory negotiation committee's report.

The definition of ''beach access route'' and ''designated trailhead'', ''outdoor recreation access route'', and ''tread width'' are included as a part of the final report.

The term ''beach access route'' is defined as a continuous unobstructed path designated for pedestrian use that crosses the surface of the beach. Beaches can be found in three general aquatic environments: coastal areas, along rivers, and along lakes and ponds. Although the term ''beach'' is not defined, the committee broadly considered this to include designated areas along a shore of a body of water providing pedestrian entry for the purposes of water play, swimming, or other water shoreline activities. A beach access route is a designated path and different from an area where entry into the water is possible, but not provided.

A beach access route is a pathway over the surface of the beach itself, not the route leading to the edge of the beach surface. When a beach is fronted by a park or other outdoor developed area, the route over the surface to the edge and beginning of the beach surface may be considered an outdoor recreation access route addressed by section T204.

A ''designated trailhead'' is defined as a designated point of access that may contain parking areas, information kiosks, restrooms, water hydrants, and may be reached by vehicular or pedestrian access. A designated trailhead is a ''point of access'' to a trail intended for public use where information may be provided. The designated trailhead may include a vehicle parking area for the public to access the trail or may connect from a sidewalk or from a street or road in an area where pedestrian access from a nearby neighborhood may be expected. It does not include a junction between trails where there is no other access or a location where a trail crosses a road and public access from the road is not expected or is discouraged. It also does not include an access point not open to the public.

An ''outdoor recreation access route'' is a continuous unobstructed path designated for pedestrian use that connects accessible elements within a picnic area, camping area, or designated trailhead.

The term ''trail'' is defined as a route that is designed, constructed, or designated for recreational pedestrian use or provided as a pedestrian alternative to vehicular routes within a transportation system.

A trail designed, constructed, or designated for pedestrian use may also have other uses, such as bicycling or in-line skating. It is recognized that pedestrians use all trails. However, these guidelines apply only to trails where travel on foot is one of the designated uses for which the trail was created. For example, a trail designated for mountain biking will not be considered a ''pedestrian trail'' whether or not pedestrians actually use the trail. However, a multi-use trail specifically designed and designated for hiking and bicycling would be considered a pedestrian trail. Trails include, but are not limited to, a trail through a forested park, a shared-use path, or a back country trail. Trails do not include pathways such as sidewalks, pathways in amusement parks, commercial theme parks, carnivals, or between buildings on college campuses. These exterior accessible routes are already covered by the Architectural Barriers Act Accessibility Guidelines issued in 2004.

The accessibility guidelines for trails apply to those which are designed and constructed for pedestrian use. These guidelines are not applicable to trails primarily designed and constructed for recreational use by equestrians, mountain bicyclists, snowmobile users, or off-road vehicle (ORV) users, even if pedestrians may occasionally use the same trails. People use these categories of trails by means of transportation other than foot travel or personal mobility device. Design and construction requirements for equestrians, mountain bikes, ORVs, and snowmobiles are based on the specific requirements for the intended mode of transportation. For the safety of trail users, pedestrian use may not always be permitted on these trails in order to minimize conflicts between motorized and non-motorized recreation. These trails do not preclude use by a person with a disability since it is planned that all trail users would be using the one or more alternative means of transportation for which the trail is designed and constructed. The design and construction of pedestrian trails without consideration of these proposed guidelines, by contrast, could present barriers to some trail users because the intended use is by foot or personal mobility device. For these reasons, the committee intentionally limited the application of the proposed guidelines to pedestrian use trails.

The definition used in these proposed guidelines is not the only definition used by trail designers and managers. Rather, it was developed to specifically define the scope of these guidelines. Additionally, it is intended that trails and side trails leading to elements related to the trail, such as campsites and restrooms, should meet the accessibility guidelines for trails, not outdoor recreation access routes.

The term ''tread width'' is defined as the width of the usable trail tread measured perpendicular to the direction of travel and on or parallel to the surface of the usable trail tread. The minimum clear tread width is the narrowest measurement on the usable trail tread with respect to a specific trail segment. Clear tread width differs from clear width in that the latter is the amount of land potentially available for the trail.

Chapter T2: Scoping Requirements

Chapter T2 contains scoping provisions that specify which elements and spaces are required to comply with the technical requirements in Chapters T3 and T4.

T201 Application

This section provides that these guidelines apply to all newly designed and constructed trails, outdoor recreation access routes, beach access routes, and picnic and camping facilities and altered portions of existing trails that connect to an accessible trail or designated trailhead. The requirements apply to both permanent and temporary facilities. It is recognized that compliance with this section will not always result in facilities that will be accessible to all persons with disabilities. These guidelines recognize that often the natural environment will prevent full compliance with certain technical provisions.

T202 Additions and Alterations to Existing Facilities

This section requires that each addition to an existing facility comply with the requirements for new construction.

T202.3 Alterations

This section requires that where existing trails connecting to designated trailheads or accessible trails are altered, they shall comply with the requirements of Chapters T2 and T3. Committee members sought to limit the application of these guidelines where existing trails are not connected to a designated trailhead or an accessible trail. Further discussion is included under T203 Trails. The section also provides that where existing outdoor recreation access routes, beach access routes, and picnic and camping facilities are altered, each altered element or space must comply with the applicable requirements of Chapter T2. Additionally, an alteration is prohibited from decreasing or having the effect of decreasing the level of accessibility below the requirements for new construction or imposing a requirement for accessibility greater than that required for new construction.

Exception 1 addresses the circulation path to an altered element or space. Where the circulation path to the altered element or space is not altered, an outdoor recreation access route is not required.

Exception 2 addresses altered picnic and camping elements. Where picnic or camping elements are altered and the ground surface is not, the ground surface is not required to comply with provisions for clear space, surface slope, and accessible surfaces.

T203 Trails

This section requires that where trails connect to designated trailheads or accessible trails, they shall comply with T303. Where elements or spaces are

provided on trails complying with T303, they shall comply with the applicable requirements of Chapter T2.

Committee members were concerned about the application of these proposed accessibility guidelines to new and altered trails connecting to portions of existing trails. They were concerned about the development of newly constructed trails connecting to an existing trail, where it was highly unlikely that the existing portion could ever be made accessible. They were specifically concerned about newly constructed and altered trails in the ''middle of nowhere''. To address this concern, section T203 clarifies that the technical provisions apply only to newly designed and constructed trails, and altered portions of an existing trail that connects to an accessible trail or a designated trailhead. Where new trails connect to an existing trail that is not accessible, the technical provisions do not apply. Additionally, the technical provisions do not apply where the new or altered portion is not connected to a designated trailhead.

Section T203 also requires elements provided on trails to comply with the applicable requirements of Chapters T2 and T3. For example, if a bench is provided along a trail complying with T303, the bench must meet the applicable provisions of T313. Where elements are provided along trails, they are not required to be connected by an outdoor recreation access route.

Question 14: Where trails are not accessible, the committee could not agree on whether elements such as benches, picnic tables, or toilet rooms located on a trail should be required to be accessible. For example, an element such as a picnic table may be located on a trail too steep to be accessible. The committee considered how future and existing technology will allow assistive devices to get over more difficult terrain. The committee discussed options to minimize scoping (*e.g.*, one of each element) requirements or limit the requirement to certain elements such as sanitary facilities. Should elements located on inaccessible trails be required to be accessible?

The committee considered many different approaches to developing accessibility guidelines for newly constructed and altered trails. Each approach balanced accessibility with the uniqueness of the outdoor environment. The following are examples of the approaches considered for trails throughout the committee's deliberations.

- Requiring a percentage of the miles of trails provided to be accessible. Using this approach, it was agreed that some trails, such as paved urban and suburban transportation routes, should usually be accessible. But the committee could not agree on the types of trails, other than the type mentioned above, that should be accessible and to what percent. The committee determined that this approach would be too arbitrary and too difficult to follow.
- Requiring a percentage of the total number of trails to be accessible. The committee could not agree on a percentage. A significant issue was the difficulty in separating existing trails and new trails when determining the total number of trails.
- Dividing trails into different categories (*i.e.*, front country and back country) and requiring certain accessibility guidelines to be followed. The committee could not agree on the categories, nor could it agree that a trail in one category would always be different than a trail in another category. A concern was that only ''easy'' trails would be made accessible, thereby eliminating the ability for people with disabilities to use more difficult trails.
- Requiring a certain level of access dependent on the location of the trail in terms of the type of setting (*i.e.*, highly developed, moderately developed, or minimally developed). Definitions must be agreed to and understood by the trails community, people with disabilities, and land management agencies that are a part of the Federal government. The committee could not find acceptable definitions for a ''settings'' approach.

Committee members evaluated each approach through extensive discussion and analysis. Within each proposal, the committee weighed the balance between accessibility and the uniqueness of the outdoor environment. Trails are often designed for a certain experience, or for the user or types of use within the setting. Primitive or back country trails for example, are usually found in remote locations or in a natural state with limited development. Throughout the discussions, committee members were concerned that providing access would change the experience or result in a significant environmental impact. Even providing accessible trails in a highly developed setting raised concerns that all trails would begin to look alike. Committee members did not want the proposed guidelines to impede the creativity of planners or designers.

As this discussion evolved, some concerns common to each approach arose regarding the potential impact on the natural environment. The committee attempted to clarify and define these concerns so that all involved could agree. The result is that section T302 defines four conditions where trail construction projects can depart from the technical provisions. This departure is allowed for the duration of the existence of the condition, or unless the condition is such that it makes it impractical to make the remainder of the trail accessible.

When designed and constructed, an accessible trail is a trail that meets the technical provisions included within these proposed guidelines. It is also considered accessible where one of the exceptions within the technical provisions is used to address a specific condition. This is limited to certain exceptions, and does not include those that allow for departure from the entire provision based on the conditions in T302.

T204 Outdoor Recreation Access Route

An outdoor recreation access route is a continuous unobstructed path designated for pedestrian use that connects accessible elements within a picnic area, camping area, or designated trailhead. Outdoor recreation access routes do not include pathways such as sidewalks, pathways in amusement parks, visitor centers, commercial theme parks, or carnivals and between buildings on college campuses already addressed by the Architectural Barriers Act Accessibility Guidelines issued in 2004.

Outdoor recreation access routes are required to connect elements required to be accessible. For example, where a cooking grill and a picnic table are provided in an accessible camp site, the outdoor recreation access route is required to connect these elements. Elements such as benches or picnic tables located along a trail, however, are not required to be connected by an outdoor recreation access route.

At least one outdoor recreation access route must connect accessible elements and spaces within the area. Five exceptions are added to this provision. Elements located on trails are not required to be connected by an outdoor recreation access route. Where multiple picnic tables, fire rings, cooking surfaces or benches are provided, at least 40 percent (of the accessible elements), but not less than two, must be located along an outdoor recreation access route. For example, if ten picnic tables are provided in a picnic area, T206.2.2 requires five tables to be accessible. Of the five tables required to be accessible, 40 percent, or two, would need to be located along an outdoor recreation access route.

In the outdoor recreation environment, the natural terrain often

presents a real obstacle. Although this would not affect the accessibility of elements such as picnic tables and fire rings, it could impact getting to them. The committee realized that in many areas, it might not be possible to locate all accessible elements along an outdoor recreation access route. Rather than decreasing the number of accessible elements, the decision was made to reduce the scoping for outdoor recreation access route connections. While some committee members wanted all accessible elements to be located along an outdoor recreation access route, other committee members felt that would be unrealistic in the outdoor environment given constraints of the natural terrain. The committee finally reached consensus on requiring 40 percent of the accessible elements to be located along the outdoor recreation access route.

T205 Beach Access Routes

Section T205.2 addresses the location of beach access routes. Beach access routes shall coincide with or be located in the same area as general circulation paths.

The proposed accessibility guidelines for beaches include two scoping provisions. Section T205.2 addresses new beaches and section T205.3 addresses existing beaches. A ''new beach'' refers to sites where a beach is created through the importation of sand or other beach surface to create a new beach where none previously existed. The proposed guidelines treat ''new beaches'' differently from ''existing beaches''. A beach access route is required in new construction. The committee agreed that the opportunity to provide access is greater with a newly constructed beach. The committee also considered the option of a scoping requirement based upon the volume of new beach created, but due to the difficulty in measuring a changing volume of sand, did not include that option.

Section T205.2 requires that where a new beach is constructed, a minimum of one beach access route must be provided for every one half mile of linear feet of new beach. The committee considered that one half mile was a reasonable distance between beach access routes on a new beach.

Question 15: Comment is sought on the impact of constructing a beach access route every ½ mile along a new beach. If this distance is not appropriate, other specific distances are requested.

Question 16: The committee outlined several exceptions to the application of the technical provisions for beach access routes in T305. Comment is sought about whether there are any other situations for which site infeasibility would preclude compliance with the technical provisions for a beach access route. If so, are there specific technical provisions (T305) where departures may be necessary due to site constraints?

Section T205.3 addresses beach access routes for an existing beach. Where a pedestrian route is provided from a developed site to the edge of an existing beach surface, a beach access route must be provided. This provision addresses a situation when an entity decides to construct a pedestrian route which is used by everyone to access a beach. In that situation, the action will trigger an obligation to address access for persons with disabilities. The committee did not limit the obligation to only when an entity constructs a path perpendicular to a beach edge because few such paths are developed. The committee also intended to include pedestrian sidewalks or boardwalks along the beach as ''pedestrian routes'' to the edge of an ''existing beach.''

Question 17: The committee considered beach sites where constructed parking spaces or a parking lot is provided adjoining the beach. Should the provision of constructed parking spaces adjoining the beach, trigger a beach access route? If so, should the trigger be based on the number of parking spaces or some other measure?

The committee discussed several options and decided that the obligation to provide a beach access route over the surface of the beach would be triggered when a pedestrian access route to the edge of the beach surface is provided. The committee recognized that this would obligate an entity to extend a path further than they might have originally intended. However, the committee felt strongly that a developed path which ends at the edge of the beach surface would be of little use to a person with a disability who wishes to traverse the beach itself. They also believed that this requirement was reasonable since the provision allows the beach access route to be either temporary or permanent. Designers and operators can decide the type of route appropriate given the different environments. The committee determined that the beach route would be required to the same point appropriate for an ocean, river, lake, or reservoir.

Several exceptions are permitted for routes on existing beaches. Exception 1 permits the use of a ''temporary'' beach access route where one is required. The committee believed that requiring a permanent structure was far too restrictive from a design or environmental perspective. In particular, constraints of the environment may limit or preclude the construction of permanent structures. Permanent structures may also require additional permits in coastal and shoreline areas. Wave action can also cause significant erosion which can shortly turn a permanent structure into a hazard. Therefore, entities can choose to use a temporary structure for administrative and operational reasons. Vehicular access or access provided by an assistive device would not meet the technical provisions of a beach access route. While these options may enhance access to the beach for persons with disabilities, they are not considered alternatives to providing a beach access route. The committee intended that temporary beach access routes be in place during all hours where the public has access to the beach.

Exception 2 exempts routes created solely for shoreline maintenance from complying with T205. The committee recommended exempting those routes which are strictly established for shoreline maintenance personnel, particularly if accessed by a vehicle.

Exception 3 exempts routes created solely as undeveloped public easements from complying with section T205. The committee recommended an exemption if a ''route'' is merely an open public easement and right of way, an undeveloped space or opening created between developments where a developer leaves space open under the requirements of State or local laws for shoreline access.

Exception 4 exempts a beach access route from being required where another beach access route exists within one-half mile and is within the beach of the same jurisdiction. The committee recommended that if a beach access route already exists to the beach in close proximity, there should be no requirement to create another beach access route. The committee considered one-half mile to be a reasonable distance so long as the existing beach route is served by the same beach. This is similar to the philosophy that all entrances into the same building do not have to be accessible. The one-half mile is also consistent with the requirement for scoping for a second route with construction of a new beach.

Exception 5 distinguishes beach replenishment from alterations. Nourishment is the process of replenishing a beach. While it can occur naturally with the depositing of sand from wave action, it is more commonly

accomplished artificially by mechanically depositing sand on the beach. A beach may completely erode before it is artificially nourished, or it may be nourished on a periodic schedule to maintain the desired amount of beach for use or to act as a barrier for adjoining buildings and facilities. Exception 5 permits the process of beach nourishment without triggering the alteration provision. The committee did not believe that such activities should trigger any obligations for a beach access route over the surface of the beach.

Question 18: Comment is sought on whether there is a need to distinguish between certain beach nourishment projects. Should certain beach nourishment activities or projects trigger the requirements of a beach access route? If so, how should these projects be identified or defined?

Exception 6 provides an exception where the pedestrian route which is developed along the edge of an existing beach is elevated higher than 6 inches above the beach surface. This exception is intended to address those situations where a lengthy pedestrian route such as a sidewalk fronts the length of a beach and the route is elevated higher than 6 inches. The committee recognized that those areas would be drop-offs where the creation of a beach access route would require 6 feet of ramp to be constructed to meet the beach surface.

T206 Picnic Tables

Section T206.2.1 requires that where one fixed picnic table is provided in a picnic area, it must be accessible. The table must also be located along an outdoor recreation access route. This provision is included in order to ensure that a picnic area with only one table is accessible to and usable by people with disabilities. If only one table is provided, and it is not accessible, people with disabilities would not have the option of choosing another table. This provision applies only to picnic tables that are ''fixed'' to the ground, (*i.e.*, permanently attached such as by a chain from the table to a concrete footing below ground).

Section T206.2.2 requires that where two or more picnic tables are provided in a picnic area, at least 50 percent, but no less than two, must be accessible.

Some committee members initially proposed 100 percent scoping, requiring all tables to be accessible. Other members considered 100 percent too high and more than what is required for the built environment. After much debate, committee members agreed that 50 percent scoping would adequately accommodate the demand for accessible tables. Committee members considered this to be realistic and feasible for most outdoor recreation providers, and would result in a higher number of accessible tables in smaller picnic areas.

The proposed scoping provision addresses picnic tables located in an ''area.'' An ''area'' refers to a designated location where picnic related elements are located. For instance, a picnic ''area'' is a designated location where picnic related elements are located. Areas may be separated and include different settings on the same site. For example, a picnic area located next to a lake in a park is considered a separate picnic area from a pavilion with numerous picnic tables within the same park. Picnic ''areas'' may also be separated and designated by a name or connected to a separate entrance road.

Section T206.3 requires accessible tables to be dispersed among the various types of picnic settings or opportunities provided. For example, a particular picnic area may offer picnic sites near the lake, in the woods, or in the open sunny portion of the area. This provision requires that the number of accessible tables be distributed throughout the area, so that people with disabilities would have a choice of picnic locations similar to what other visitors to the area have. This section would not increase the total number of accessible tables required in T206.2.

Section T206.4 addresses wheelchair spaces and requires at least one wheelchair space at an accessible picnic table. Where the table top perimeter exceeds 24 linear feet, the number of wheelchair spaces must comply with Table T206.4. More wheelchair spaces would be required where the perimeter of the table top (not including the bench) exceeded 24 linear feet. The location of the wheelchair space(s) would be left to the discretion of the designer, although an advisory note (T306.2) recommends that the wheelchair spaces be dispersed rather than clustered in one location.

Committee members discussed the issue of wheelchair spaces at length, finally basing the number of spaces on an average table dimensioned at ten-feet long by 2 and one half feet wide. Such a table has a perimeter of 25 linear feet and is designed to accommodate up to ten people. The committee decided tables of that size should provide two wheelchair spaces, while smaller tables should only require one space. Tables with a perimeter of 45 to 64 linear feet (*i.e.*, two ten-foot long tables joined together) would require three wheelchair spaces. Tables with 65 to 84 linear feet would require four wheelchair spaces, and so on.

T207 Fire Rings

Section T207.2.1 requires that where only one fire ring is provided in an area, it must be accessible.

Section T207.2.2 requires that where two or more fire rings are provided in an area, at least 50 percent, but not less than 2, must be accessible.

Section T207.3 requires that the accessible fire rings be located throughout an area and be dispersed among the types of fire rings, if different styles or designs are provided. For example, a picnic area may provide fire rings without cooking surfaces (*i.e.*, for camp fires only) and some with cooking surfaces. In addition, the area may offer sites nestled in the trees, some near the water, and others in open meadows. This section would require that accessible fire rings be available in both types and distributed among the different sites, affording people with disabilities the similar choice of fire ring location that is available to other visitors. This provision does not require an increase in the total number of accessible fire rings.

T208 Cooking Surfaces, Grills, and Pedestal Grills

Section T208.2.1 requires that where only one cooking surface, grill, or pedestal grill is provided in an area, it shall comply with section T308. Section T208.2.2 requires that where multiple cooking surfaces, grills, or pedestal grills are provided in an area, 50 percent, but not less than two, shall comply with T308. The rationale for this provision is consistent with picnic tables (T206), fire rings (T207) and other outdoor elements.

Section T208.3 requires accessible cooking surfaces, grills, and pedestal grills to be dispersed throughout the area and among the types provided. For example, if a picnic area offers different types of cooking surfaces, the total number of accessible cooking surfaces is to be distributed among the different types provided. This provision would not increase the number of cooking surfaces, grills, or pedestal grills required to be accessible.

T209 Trash and Recycling Containers

Section 209.1 requires each trash or recycling container to be accessible. The committee considered this to be a health issue making it imperative that each container meet the provisions for accessibility. This requirement is compatible with those for other singly occurring elements in an outdoor setting, as well as providing consistency

with the Architectural Barriers Act Accessibility Guidelines. An exemption is provided where the container has one or more compartments. In this case, 50 percent of the compartments must be accessible. The committee determined that this requirement would assure the user of finding at least one accessible compartment in a multi-bin container.

T210 Wood Stoves and Fireplaces

Section T210.1 requires each wood stove and fireplace to be accessible.

T211 Overlooks and Viewing Areas

Section T211.1 requires each viewing area, where provided, on designated overlooks to be accessible.

Overlooks and viewing areas are specifically designed and constructed to provide an unobstructed observation of a vista or to a specific point of interest, such as the view to a mountain range or down into a valley or to a waterfall or geologic formation. As such, they are a destination for the user and should be accessible. An exception permits a minimum of one of each viewing opportunity for distinct points of interest where multiple viewing areas are provided.

T212 Telescopes and Periscopes

Section T212.1 requires that when telescopes or periscopes are provided, 20 percent, but never less than one, telescope or periscope must be accessible. Where only one telescope or periscope is provided, it must be usable from the seated position and also be usable from the standing position. This configuration will provide accessibility and usability.

Viewing areas or overlooks are sometimes equipped with mounted telescopes and less often with periscopes. The purpose of these elements is to provide the visitor with an even closer view of a distinct point of interest (rather than a vista).

Many existing sites only provide scopes usable from a standing position. This does not accommodate the needs of people using wheelchairs, children, or people of shorter stature. The committee made specific mention of children when discussing scopes, based on experiences of having to lift children to use scopes. Lifting may not be possible for people with back difficulty or insufficient strength.

T213 Benches

Section T213.2.1 requires that where only one bench is provided, the bench must be accessible. The committee felt that it was important that where only a single bench is provided, it must be usable by all visitors. This is generally consistent with the Architectural Barriers Act Accessibility Guidelines and with the other elements of this section. The single bench must have at least one armrest to facilitate its use.

The committee recognized that benches, when provided, are key elements in many outdoor settings, such as picnic areas or day use areas. They are used for a variety of purposes, including places of rest or relaxation, meeting spots, and places from which to view events such as sporting activities. Whatever the use, the committee determined that the bench or benches, where provided, should be accessible. However, benches that are part of an assembly area are not addressed and are not required to meet these provisions.

Section T213.2.2 requires that where multiple fixed benches are placed in an area, at least 50 percent must be accessible. This assures the visitor that there will be at least one bench available which is accessible. Further, of the benches that are required to be accessible, 50 percent must provide an armrest. The committee felt that visitors should be provided with a choice of bench configurations that will accommodate different needs. An armrest provides support when occupying the bench and assists in transfer to or from the bench.

Section T213.3 requires dispersal of accessible benches. This provision does not require an increase in the total number of accessible benches. The dispersion of accessible benches throughout an area provides for a variety of settings and is consistent with other provisions in the Architectural Barriers Act Accessibility Guidelines.

T214 Utility Sinks

A utility sink is a sink that has a vertical dimension deeper within the confines of the sink than a standard lavatory basin, and allows the user of a picnic area or campground setting to clean large pots or equipment.

Section T214.1 requires that where utility sinks are provided, at least 5 percent, but not less than one, must be accessible.

T215 Mobility Device Storage Facilities

The committee addressed the need for storage space for mobility devices primarily where an individual using a wheelchair or other mobility device must transfer to another device or vehicle in order to take advantage of the services or programs offered at the outdoor facility. A ski facility where individuals may use an adaptive ski to participate, is an example where this type of element may be provided. The committee believed that where storage facilities are provided to protect from environmental effects or theft or vandalism, at least one storage facility must comply with T315.

T216 Pit Toilets

Pit toilets are very primitive outhouses, and may consist simply of holes dug in the ground covered by a toilet riser. The riser may or may not be surrounded by walls and a roof. Pit toilets are generally located in remote, undeveloped areas, and are provided primarily for resource protection rather than visitor convenience and comfort. Pit toilets may be permanent installations, or may be moved from one location to another as the hole is filled. These provisions apply to fixed pit toilets.

Section T216.1 requires each fixed pit toilet to be accessible, since usually only one pit toilet is provided in an area. This scoping is consistent with what would be required for other individually occurring elements.

T217 Utilities

Section T217.1 requires utilities such as electric, water, sewage, and other similar types of utilities serving accessible elements or spaces to also be accessible.

T218 Camping

Section T218.2 requires camping spaces (*e.g.,* recreational camping vehicle or trailer spaces, tent camping spaces, camping shelters, or tent pads and tent platforms), where provided, to be accessible in accordance with Table T218.2. Table T218.2 provides the number of accessible camping spaces and is based on the total number of spaces provided.

Modifications were made to the existing transient lodging scoping in the Architectural Barriers Act Accessibility Guidelines to create higher numbers of accessible camping spaces in the low range and more accessible campsites in each of the three basic camping styles. Each camping style category must achieve the proper scoping independently of the others.

The proposed scoping provisions require higher accessibility where lower numbers of features are provided. This was extensively debated among committee members and is intended to address the higher probability of utilization where low numbers of elements are provided. As an example, the chance of two picnic tables being occupied at the same time and place is much higher than five picnic tables being occupied at the same time, even though the demand may increase

proportionately to the number of tables offered.

This section divides campsites into three categories: Recreational Camping Vehicle or Trailer Spaces, Tent Spaces, and Camping Shelters and Additional Campground Spaces. Campsite use requires specific equipment and a specially designed area may not be suitable for every use. For example, if someone comes prepared to use a tent, they may not be able to use a paved recreational camping vehicle site.

Section T218.2 also addresses other camping elements provided in accessible camping spaces. To ensure usability, all elements that are provided as a part of an accessible campsite must meet the applicable provisions of Chapters T2 and T3. All elements provided in accessible campsites must be accessible.

Section T218.2.1 requires recreational vehicle spaces or trailer spaces to comply with Table T218.2. An exception is included where camping spaces are designed for both tent camping and recreational camping vehicle or camping trailer use. In this case, at least 50 percent of the accessible multi-use spaces must be 20 feet wide minimum and the remainder are permitted to be reduced to 16 feet wide minimum.

Section T218.2.2 requires that where camping spaces are designed for use for tent camping and camping shelters, accessible tent and camping shelter spaces shall comply with T318.2.2, T318.2.4, and T318.3.

Section T218.3 addresses general use parking areas. Where recreational camping vehicle spaces or trailer spaces are provided, at least one must comply with T318.2.3 and T318.2.4. Accessible recreational camping vehicle spaces or trailer spaces in general parking areas are necessary to accommodate short-term parking needs. The exception separates campsite parking from general parking. This requirement provides a special recreational camping vehicle parking space in addition to the current Architectural Barriers Act Accessibility Guideline scoping for parking areas.

T219 Warming Huts

Section T219.1 requires each warming hut to have a turning space that complies with T402. Where doors are provided, they must comply with T408.

T220 Outdoor Rinsing Showers

Section T220 addresses outdoor rinsing showers. The committee recognized that provisions for shower stalls already existed. However, the provisions are clearly intended for indoor facilities. Some provisions (grab bars and a seat) may not be applicable for an outdoor shower stall or rinsing shower typically found at a beach or at camping facilities. Outdoor rinsing showers are not typically designed with walls like other showers in the built environment. Therefore, the committee recommended that specifications for an outdoor shower be developed. In order to distinguish this type of shower from those already addressed, the committee used the term ''outdoor rinsing shower''. An advisory note has been added to further identify what is considered a rinsing shower.

Section T220.2 addresses the minimum number of accessible outdoor rinsing showers. The committee examined several ways to scope showers, considering a percentage formula, a chart similar to parking or telephones, and a minimum number. Because the committee ultimately recommended two types of outdoor rinsing showers, a low and high version, the committee recommended that a minimum number, one of each type, be accessible where rinsing showers are provided. If only one is provided, it must be a dual shower.

T221 Signs

Section T221.1 requires signs on accessible trails and trail segments to be designated with a symbol at the trail head or designated access points.

Section T221.2 requires signs on accessible campsites by using the International Symbol of Accessibility (ISA). Identification of accessible campsites by the ISA was determined to be necessary where campsite occupancy and site selection is made by users and is based on a first come, first served basis. To accommodate campground operations that assign sites either through a reservation service or upon arrival, the ISA is not required and an exception is provided to accommodate this distinction. It was determined that site assignment would create better utilization of accessible sites than the use of ISA signage. Signage is also not required where all sites are accessible.

T222 Protruding Objects

Section T222.1 requires protruding objects on trails, outdoor recreation access routes, and beach access routes to comply with T405 and to have 80 inches minimum clear head room.

Chapter T3 Technical Provisions

Chapter T3 contains technical provisions for features required to be accessible in Chapter T2.

T302 Conditions for Exceptions

Section T302 sets out four conditions under which exceptions from certain technical provisions are permitted. Each technical provision must be examined individually to determine whether an exception from that provision is permitted. This section does not provide an overall exemption of the entire trail or outdoor element. When an exception is permitted, the proposed guidelines specifically provide an exception to the respective technical provision. This is essential as the outdoor environment is very different than a constructed indoor environment. Factors which influence the ability to provide fully accessible facilities such as soil, surrounding vegetation, hydrology, terrain, and surface characteristics, are fundamental to the outdoor area. Where trails are concerned, the committee recognized that without the opportunity to permit exceptions from the technical provisions, compliance may significantly alter the nature of the outdoor experience.

The conditions in T302 do not obviate or limit in any way the obligation to comply with the technical provisions in Chapter T3 at any point where the conditions do not apply. When the condition for an exception no longer exists, the technical provisions apply. For example, the clear width of a trail tread may be reduced because of a significant natural feature. Once the trail passes this feature, the technical provisions for width shall apply. This approach also applies when designing certain outdoor elements also included in this section. The conditions that permit exception from specific technical provisions are described below.

Condition 1. Compliance Would Cause Substantial Harm to Cultural, Historic, Religious, or Significant Natural Features or Characteristics

A significant natural feature may include a large rock, outcrop, tree, or a water feature which would block or interfere with trail construction or would be directly or indirectly altered or destroyed by construction of the trail to the extent that the trail could not, at that point, be made accessible. This includes areas protected under Federal or State laws, such as areas with threatened or endangered species or designated wetlands that could be threatened or destroyed by full compliance with the technical provisions. It also includes areas where compliance would directly or indirectly substantially harm natural habitat or vegetation.

Significant cultural features include areas such as archaeological sites, sacred lands, burial grounds and cemeteries, and Indian tribal protected sites. Significant historical features include properties on or eligible for the National Register of Historic Places or other places of recognized historic value. Significant religious features include Indian sacred sites and other properties designated or held sacred by an organized religious belief or church.

Condition 2. Compliance Would Substantially Alter the Nature of the Setting or the Purpose of the Facility, or Portion of the Facility

This condition includes trails intended to provide a rugged experience such as a cross country training trail with a steep grade or a challenge course with abrupt and severe changes in level. If these types of trails were flattened out or otherwise constructed to comply with the technical provisions for accessible trails, they would not provide the intended and desired level of challenge and difficulty to users. Trails that traverse over boulders and rocky outcrops, are another example. The purpose of such trails is to provide people with the opportunity to climb the rocks. To remove the obstacles along the way or reroute the trail around the rocks would destroy the purpose of the trail. The nature of the setting may also be compromised by actions such as widening a trail through the use of imported surfaces in a remote location or removing ground vegetation in meadows or alpine areas.

Trails and other outdoor elements such as picnic and camping areas are designed to provide a particular opportunity for the user. Throughout the discussions regarding these outdoor elements, many committee members were concerned that complying with the technical provisions could change the nature of some recreation opportunities. Further, compliance could negatively impact the unique characteristics of the natural setting, the reasons why people choose to recreate in the outdoors rather than an indoor environment. People using primitive trails or camping areas, for example, often experience the outdoor environment in a more natural state with limited or no development. Evidence of manufactured building materials or engineered construction techniques in such a setting can change its primitive character, and therefore, the user's experience. In these settings, people are generally looking for a higher degree of challenge and risk where they can use their outdoors and survival skills. Compliance with the technical provisions, particularly those related to surface and obstacles, could destroy the ''natural'' or ''undeveloped'' nature of the setting. This condition addresses these concerns.

Condition 3. Compliance Would Require Construction Methods or Materials That Are Prohibited by Federal, State, or Local Regulations or Statutes

Federally designated and some State designated Wilderness Areas prohibit use of mechanized equipment, limiting construction methods to hand tools. Imported materials may be prohibited in order to maintain the integrity of the natural ecosystem. Construction methods and materials employed in designated wetlands or coastal areas are also strictly limited. For traditional, historic, or other reasons, many trails are built using only the native soil for surfacing, which may not be firm and stable. Federal statutes such as the Wilderness Act and the Endangered Species Act, and State and local statutes often impose restrictions to protect or address environmental concerns. Many aquatic features are protected under Federal or State laws. Some constructed water crossings, which would be required to provide accessibility, may not be permitted under certain laws or regulations.

''Local regulations and statutes'' have been included to address conditions where ''conservation easements'' or ''development rights'' programs have prohibited or restricted construction methods and practices. For example, where land is purchased from farms, certain use restrictions may prohibit the importation of surfacing. On the other hand, local regulations or statutes may not be developed or initiated with the sole purpose of prohibiting use by people with disabilities. For example, initiating a new local regulation that arbitrarily restricts trail width to a dimension that would not allow passage of wheelchairs or other mobility devices from accessing a trail, is not permitted under this condition.

Condition 4. Compliance Would Not Be Feasible Due to Terrain or the Prevailing Construction Practices

Complying with the technical provisions, particularly running slope, in areas of steep terrain may require extensive cuts or fills that would be difficult to construct and maintain, or cause drainage and erosion problems. Also, in order to construct a trail on some steep slopes, a trail may become significantly longer causing a much greater impact on the environment. Certain soils are highly susceptible to erosion. Other soils expand and contract along with water content. If compliance requires techniques that conflict with the natural drainage or existing soil, the trail would be difficult, if not impossible to maintain. This condition may also apply where construction methods for particularly difficult terrain or the presence of an obstacle would require the use of equipment other than that typically used throughout the length of the trail. One example is requiring the use of a bulldozer to remove a rock outcropping when hand tools are commonly used.

Several of these conditions for departures are consistent with other exceptions for trails. For example, it may be impracticable in new construction to follow these provisions where soil and terrain pose obstacles which cannot be remedied. Compliance with the provision for a firm and stable surface might conflict with the prevailing construction practices by requiring the importation of a new surfacing material that would otherwise not have been used. For example, if the prevailing construction practices would not include the importation of a new surface material and the natural surface material could not be made firm and stable, the trail may not be able to comply with that specific provision.

The term ''not feasible'' is used in this situation to specify what is ''reasonably doable''. It does not refer to the technical feasibility or possibility of full compliance with the technical provisions. For example, it may be feasible to provide a trail with a 1:20 slope or less up a 1,500 foot tall mountain using heavy construction equipment, but the trail would be at least 5.8 miles long (rather than 2 miles long under a traditional back-country layout), and may cause inappropriate environmental and visual impacts. The intent of this conditional departure is to recognize that the effort and resources required to comply would not be disproportionately high relative to the level of access created. Although technically feasible, the effort and resources required are not ''reasonable.''

Trail construction practices vary greatly, from the use of volunteer labor and hand tools, to professional construction with heavy, mechanized equipment. For alterations to an existing trail, the ''prevailing construction practices'' are defined as the methods typically used for construction or maintenance of the trail. For new trails, it is recognized that the land manager determines the construction practices to be used on each trail. However, the choice of construction practices is primarily determined by the available resources (*e.g.*, machinery, skilled

operators, finances) and the environmental conditions (*e.g.*, soil type and depth, vegetation, natural slope). The intent of this condition is to ensure that compliance with the technical provisions does not require the use of construction practices which are above and beyond the skills and resources of the trail building organization. It is not intended to automatically exempt a trail from the technical provisions simply because of a particular construction practice, (*e.g.*, the use of hand tools or to suggest that hand tools should be used to avoid compliance) when more expedient methods and resources are available.

Where specified, the presence of the conditions in T302 may also prevent full compliance with some of the technical provisions for elements in picnic, camping, and beach facilities. While the conditions for departures may be more limited with these outdoor elements, the committee included the option for exceptions based on the conditions in several provisions. In most cases, these are limited to technical provisions for clear floor or ground space, surface slope, and accessible surfacing.

Where designers or operators apply an exception from a specific technical provision because of one or more of the conditions, the other technical provisions should be applied. For example, a significant cultural feature may prohibit a 36 inch trail tread width. However, all other provisions could be met because they would not be affected by the condition.

T303 Trails

T303.2 General Exceptions

The committee realized that there may be situations where the combination of factors and conditions may make it impractical to make the entire portion of the trail accessible according to the technical provisions. Two general exceptions in section T303.2 were developed to address these situations. First, where one or more of the conditions in T302 applies and where one or more of the conditions in this general exception applies, the trail is not required to be accessible after the first point of departure. The segment of the trail between the designated trailhead and the first point of departure is required to be accessible unless the trail segment is 500 feet or less in length. If the trail segment connects to a prominent feature less than 500 feet from the designated trailhead, it is required to be accessible between the trailhead and the prominent feature. The general exceptions are based on these conditions:

- The combination of running slope and cross slope exceeds 40 percent for over 20 feet; or,
- A trail obstacle 30 inches or more in height is across the full tread width of the trail; or,
- The surface is neither firm nor stable for a distance of 45 feet or more; or,
- A clear trail width is less than 12 inches for a distance of 20 feet or more; or
- The trail is not required to comply with any of the technical provisions in T303 for more than 15 percent of the length of the trail.

The 15 percent threshold in the last condition is a compromise, negotiated to balance the resources and environmental impact with the practicality of providing meaningful access on trails. The committee recommends that trail designers and managers attempt compliance with all technical provisions throughout the full length of the trail.

Section T303.3 requires the surface of accessible trails to be firm and stable. The ''slip resistance'' requirement typically required for accessible surfaces was not included because slip resistance cannot be guaranteed in an outdoor environment. Weather conditions (rain, snow, or ice) will affect slip resistance. For example, natural or non-hardened surfaces may not be slip resistant. Slip resistance may also be difficult to control when leaves and other surface debris caused by natural erosion accumulate on the surface.

The means and materials used to establish accessible exterior surfaces are plentiful. Crushed stone, fine, packed soil, and other natural materials can provide a firm and stable surface. Natural materials bonded with synthetic materials can provide the required degree of stability and firmness. An advisory has been added to provide additional information concerning accessible exterior surfaces. An exception is permitted from this provision where one or more of the conditions in T302 exist.

Section T303.4 requires the clear trail tread width to be 36 inches minimum. Exception 1 permits the clear trail tread width to be reduced to 32 inches minimum where one of the conditions in T302 applies. Exception 2 permits departures from T303.4 where a 32 inch minimum width cannot be provided because one of the four conditions in T302 exists.

Section T303.5 requires openings in trail surfaces to be of a size that does not permit the passage of a ½ inch diameter sphere. Elongated openings must be placed so that the long dimension is perpendicular or diagonal to the dominant direction of travel. Exception 1 permits elongated openings to be parallel to the dominant direction of travel where the opening does not permit passage of a ¼ inch diameter sphere. This is necessary to allow trail managers to place boards lengthwise along a boardwalk trail to reduce the environmental impact such as on a wetland area. Exception 2 permits openings that do not permit passage of a ¾ inch diameter sphere where at least one of the conditions in T302 applies. Exception 3 exempts trails from the provisions of T303.5 where openings that do not permit passage of a ¾ inch diameter sphere are not feasible because at least one of the four conditions in T302 apply.

A ¾ inch spacing is permitted through an exception since many trails use wood plank decking or boardwalks to cross wet, sandy, rocky, or environmentally sensitive areas. The planks expand and contract because of weather conditions. The boardwalks may need more than ½ inch spacing between the planks to permit expansion and to allow water to drain.

Section T303.6 requires that any tread obstacles shall not exceed 2 inches maximum in height. Exception 1 permits a 3 inch obstacle where the running and cross slopes are 1:20 or less. Exception 2 permits obstacles greater than 3 inches where at least one of the conditions in T302 applies. The committee recognized that natural features such as rocks, roots, and ruts may require a greater obstacle height than what is permitted in the indoor environment. Some wheelchairs used in an outdoor environment are designed to handle obstacles of these heights. However, trails used by bicyclists or in-line skaters or which serve as alternate transportation routes for sidewalks should be smooth with no abrupt changes in level.

Section T303.7 requires passing space where the clear tread width of the trail is less than 60 inches. Passing space is required at intervals of 1,000 feet maximum. Either a T-shape or a turning circle is permitted. An advisory states that the passing space may be located to one side of the trail. An exception is permitted from this provision where passing space cannot be provided because at least one of the four conditions in T302 exists.

The committee negotiated various intervals for passing space, ranging from 200 feet to no requirement. Those favoring longer intervals or no requirement explained that the outdoor

environment often allows users to move off the trail tread without involving trail construction (as opposed to being restricted by walls within a building). There was concern about having an unrealistic construction requirement in a natural setting, and concern that requiring a constructed passing space at more frequent intervals may be unnecessary where few users are on a trail at the same time. An advisory is added recommending that trails expected to have high use and trails with long sections where it is not possible to move off the trailhead (e.g., boardwalks in a wetland) should consider more frequent passing spaces, especially close to the trailhead.

Section T303.8 addresses both the cross slope and the running slope of a trail. This provision was the result of significant compromise among committee members. Exception 1 addresses open drainage structures. For open drainage structures, a running slope of 14 percent is permitted for 5 feet maximum with a cross slope of 1:20 maximum. Cross slope is permitted to be 1:10 at the bottom of the open drain, where the clear tread width is 42 inches minimum. Exception 2 exempts trails from T303.8 where one or more of the conditions of T302 exist.

Section T303.8.1 requires that the maximum cross slope of trail segments not exceed 1:20. Committee members recognized that cross slopes, or the side-to-side slope of a trail, can be difficult to traverse. At the same time, trails need to be designed to provide sufficient drainage to prevent ponding and water damage to the trail. Non-paved surfaces generally require more than a minimum of 1:50 cross slope.

Section T303.8.2 addresses the maximum running slope of trail segments. Section T303.8.2 permits no more than 30 percent of the total trail length to exceed a 1:12 slope. The committee debated various slope ratios for this provision. Committee members advocating steeper slopes were concerned that requiring unrealistic slopes in natural areas could significantly alter the natural terrain. Members advocating less slopes were concerned that steeper slopes would not be accessible, and could be a potential safety hazard.

This section requires that trails comply with one or more of four separate provisions. Designers may choose which provision to apply. Section T303.8.2.1 permits a running slope at 1:20 or less for any distance. Section T303.8.2.2 permits a running slope of 1:12 maximum for 200 feet maximum. Resting intervals must be provided at distances no greater than 200 feet apart. Section T303.8.2.3 permits the running slope to be 1:10 maximum for 30 feet maximum. Resting intervals must be provided at distances no greater than 30 feet apart. Section T303.8.2.4 permits the running slope to be 1:8 maximum for 10 feet maximum. Resting intervals must be provided at distances no greater than 10 feet apart.

Because the terrain in outdoor environments is often steep, the committee realized that applying slope and ramp requirements was not feasible. The proposed running slopes and maximum distances represent a compromise and balances accessibility with the constraints imposed by natural topography.

Question 19: Section T303.8 permits departure from the technical provisions for cross slope with open drainage structures. A cross slope up to 10 percent is permitted at the bottom of the open drain where the clear tread width is 42 inches minimum. Are open drainage structures the only drainage structures where cross slopes up to 10 percent should be permitted? If not, what other areas should be identified?

The committee believed that handrails should not be required on trails, since handrails are impractical in this environment. In addition, steeper grades on trails are usually contiguous with the surrounding terrain rather than elevated above it as with a ramp to a building. Instead, the committee limited the length of steep portions of trail segments and required resting intervals.

Section T303.9 requires resting intervals to be 60 inches in length to accommodate wheelchair users and at least as wide as the widest portion of the trail segment leading to the resting interval. The slope of the resting interval must not exceed 1:20 in any direction. An advisory recommends that the resting interval may be located to one side of the trail to allow other users to pass. An exception exempts trails from this technical provision where one of the conditions in T302 exists.

Section T303.10 does not require edge protection on accessible trails. However, where edge protection is provided, the height must be a minimum of 3 inches. Natural trail surfaces are likely to have variations in the trail surface, and a 2 inch edge protection may not be obvious or detectable in the outdoor environment. In the outdoor environment, many people with limited vision who use canes will search higher than in an indoor environment to distinguish between the edge and variations within the trail.

T304 Outdoor Recreation Access Routes

Section T304.2 requires the surface of an outdoor recreation access route to be firm and stable. This is consistent with the surface provision proposed for trails and other outdoor elements.

Section T304.3 requires the clear tread width of the outdoor recreation access route to be 36 inches minimum. An exception permits the width to be the minimum necessary or 32 inches for a distance of 24 inches where one or more of the conditions in T302 exist.

Section T304.4 addresses openings and does not permit passage of a ½ inch diameter sphere. Elongated openings must be placed so that the long dimension is perpendicular or diagonal to the dominant direction of travel. An exception permits the openings to run parallel so long as the opening does not permit passage of ¼ inch diameter sphere.

Section T304.5 requires that tread obstacles not exceed 1 inch high maximum. An exception permits a 2 inch high obstacle where it is beveled and where at least one of the conditions in T302 applies. Tread obstacles may occur where surface materials changes such as asphalt surfaces leading up to a concrete slab.

Section T304.6 requires passing space where the clear width of the outdoor recreation access route is less than 60 inches. Passing space is required at intervals of 200 feet maximum. Committee members determined that outdoor recreation access routes were more like an indoor accessible route than a trail. The passing space must be either a 60 inch by 60 inch space or an intersection of two walking surfaces which provide a T-shaped space complying with T402.1.2, provided that the arms and stem of the T-shaped space extend at least 48 inches beyond the intersection. An exception permits the passing spaces to be at intervals not to exceed 300 feet. This was added to address settings where it may not be possible to provide passing space within a 200 foot minimum interval, such as environmentally sensitive areas.

Section T304.7.1 addresses the cross slope of an outdoor recreation access route and permits a 1:33 maximum cross slope. An exception permits a 1:20 cross slope where necessary to ensure proper drainage. Natural or naturally appearing surfaces often require greater than 1:50 cross slopes to ensure proper drainage. Committee members agreed that water ponding on an outdoor recreation access route may make the route inaccessible; therefore, a greater cross slope is proposed.

Section T304.7.2 addresses running slope. Designers have a choice of applying one or more of the technical provisions in this section. Section T304.7.2.1 permits the running slope to be 1:20 or less for any distance. Section T304.7.2.2 permits the running slope to be 1:12 maximum for 50 feet maximum. Resting intervals must be provided at distances no greater than 50 feet apart. Section T304.7.2.3 permits the running slope to be 1:10 maximum for 30 feet maximum. Resting intervals must be provided at distances no greater than 30 feet apart.

Question 20: The committee was unable to decide whether there should be exceptions from the technical provisions for outdoor recreation access routes based on the conditions in T302. Currently, departures from the technical provisions are permitted for specific elements, (*e.g.*, picnic tables, camp sites) but not for the outdoor recreation access routes that connect those elements. Should exceptions be permitted for specific elements on the outdoor recreation access routes leading to those elements?

Question 21: The committee also discussed potential exceptions from the provisions for slope on an outdoor recreation access route, unrelated to whether the elements themselves complied with the technical provisions. The committee considered two options. One option provided a maximum for the total length of the outdoor recreation access route that could exceed a 1:12 slope. The committee considered that either 10 percent or 15 percent of the total length of the outdoor recreation access route could exceed a 1:12 slope. The second option was to apply the conditions in T302 to the technical provisions for the slope of an outdoor recreation access route. Comment is requested on this issue.

Section T304.8 requires resting intervals to be 60 inches minimum in length and have a width at least as wide as the route connecting it. The slope must not exceed 1:33 in any direction. Where the surface conditions require slopes greater than 1:33 for proper drainage, a 1:20 slope is permitted.

Section T304.9 requires edge protection, where provided, to be 3 inches minimum in height. This is consistent with the proposed provision for trails.

T305 Beach Access Routes

Section T305.2 requires the surface of the required beach access route to be firm and stable. Given the existence of loose material natural to a beach environment such as sand, algae, and barnacles, the committee decided that slip resistance is not an appropriate requirement for a beach access route. This is consistent with the provisions for other outdoor routes. Where a temporary route is provided, it must also be firm and stable.

Section T305.3 requires that a beach access route extend to the high tide level, mean river bed level, or the normal recreation water level. The committee believed that different lines of demarcation would vary depending upon the location of the beach. The committee selected the high tide level for coastal beach, the mean river bed level for river beaches, and the normal recreation water level for lakes and reservoirs. Beach access to the water will vary considerably between geographic locations because the tidal difference between high and low tides varies from place to place. For example, a beach in Alaska may experience tidal differences of tens or even hundreds of feet; beaches in Florida will have much smaller differences between low and high tides. The high tide mark is a reasonable location to terminate permanent structures as built facilities; below this point it is much more likely to wash out. The mean river bed level and the normal recreation water level are comparable for rivers and lakes, respectively.

Question 22: Comment is sought on the appropriateness of these markers and the ability to determine those levels at most beaches.

Question 23: The committee did not require a beach access route to extend beyond the high tide level, mean river bed level, or normal recreation water level. Comment is sought on what technical specifications should be required, if any, if an entity decides to provide the route into the water? Should the technical provisions for sloped entry into pools be applied in these cases?

Section T305.4 requires the clear tread width of the beach access route to be 36 inches minimum. This requirement is consistent with the proposed technical requirement for the clear tread width of trails and outdoor recreation access routes. Unlike other requirements for the clear width of trails and outdoor recreation access routes, no reduction in width is permitted. Since the beach access route will most likely be adjacent to sand, maintaining the 36 inch width is critical to avoid being caught off the path on a nontraversable sandy surface. The need for additional space for passing and resting has been included in other provisions.

Section T305.5 requires openings in the surfaces of the beach access route to be of a size that does not permit passage of a ½ inch diameter sphere. Elongated openings must be placed so that the long dimension is perpendicular or diagonal to the dominant direction of travel. This is consistent with the Architectural Barriers Act Accessibility Guidelines and the proposed technical provisions for outdoor recreation access routes. An exception permits the elongated openings to run parallel to the dominant direction of travel where the opening does not permit passage of a ¼ inch sphere.

Section T305.6 limits the obstacles in the beach access route to be 1 inch high maximum. This departs from the Architectural Barriers Act Accessibility Guidelines but is consistent with the proposed technical requirements for tread obstacles for an outdoor recreation access route and is necessary due to the uniqueness of the outdoor environment.

Section T305.7 requires passing space. Where the clear width of the beach access route is less than 60 inches, passing space must be provided at intervals of 200 feet. Passing space shall be either a 60 inch by 60 inch minimum space or an intersection of two walking surfaces which provides a T-shaped space complying with T402.1.2, provided that the arms and stem of the T-shaped space extend at least 48 inches beyond the intersection. This is consistent with the technical provisions for passing spaces on an outdoor recreation access route.

Section T305.8 requires a turning space or resting space at the end of the beach access route or at the high tide level, mean river bed level, or normal recreation water level. Turning space must not overlap the beach access route and must be either a 60 inch minimum by 60 inch minimum space, or an intersection of two walking surfaces which provide a T-shaped space complying with T402.1.2 provided that the arms and stem of the T-shaped space extend at least 48 inches beyond the intersection.

A resting or turning space allows a person with a disability to be out of the route of travel, to leave their wheelchair while transferring into a beach terrain vehicle, or simply to wait in a place outside the flow of traffic. The location of this resting or turning space should be in an area which is dry. If the route extends further than the minimum distance required, the resting or turning space may be placed at the end of the beach access route, although the location may not always remain dry.

Section T305.9 addresses the cross slope and running slope of beach access routes. Section T305.9.1 requires the maximum cross slope of a beach access route to not exceed 1:33. An exception permits cross slopes of 1:20 maximum

for drainage. This is consistent with the proposed technical requirements for cross slope of an outdoor recreation access route and is necessary for drainage in the outdoor environment.

Section T305.9.2 addresses running slope. Designers have a choice of applying one or more of the technical provisions in this section. Section T305.9.2.1 permits running slope to be 1:20 or less for any distance. Section T305.9.2.2 permits the running slope to be 1:12 maximum for 50 feet maximum. Resting intervals must be provided at distances no greater than 50 feet apart. Section T305.9.2.3 permits the running slope to be 1:10 maximum for 30 feet maximum. Resting intervals must be provided at distances no greater than 30 feet apart. The rationale for requiring a resting interval is the same as for trails or outdoor recreation access routes. The running slope provisions are the same as those for an outdoor recreation access route.

Section T305.10 requires edge protection where drop-offs from the beach access route to the beach are 6 inches or higher. The edge protection includes curbs, walls, or projecting surfaces that prevent people from falling off the route. Edge protection must be a minimum of 2 inches high. If the drop-off is greater than 1 inch, but less than 6 inches, then the edge must be beveled. While a raised edge may be considered a tripping hazard in some instances, the committee recognized that in some locations, an elevated route such as that created by a boardwalk might necessitate a raised edge for safety. Where these locations occur, the elevation of the route is already an impediment to the perpendicular traffic and the addition of edge protection would not create any more of a tripping hazard than that already created by the elevated route itself. Therefore, the committee recommended that those elevated routes, defined as 6 inches or more above the beach surface, have a requirement for edge protection equivalent to the edge protection requirement in the Architectural Barriers Act Accessibility Guidelines for ramps. If the height of the route is greater than 1 inch but less than 6 inches, the committee felt that edge protection was not required, although the edge should be beveled. If the height of the route is 1 inch or less, then there is no requirement for beveling, as an inch or less elevation is virtually a flat route and is reasonable to expect in a beach environment given the shifting of sand.

T306 Picnic Tables

Section T306.2 addresses the technical provisions for wheelchair spaces. Each wheelchair space must provide knee space of at least 30 inches wide, 19 inches deep, and 27 inches from the ground or floor to the bottom of the table top. This provision is different from the Architectural Barriers Act Accessibility Guidelines in that it also requires a toe clearance of 9 inches above the ground or floor extending for a total depth of 24 inches. This is an additional 5 inches minimum beyond the 19-inch knee space depth. This ensures that adequate toe clearance is provided at tables that have a solid leg at each end (rather than an A-shape frame or individual legs). A 19-inch deep space at the end of a solid leg table would not allow a person using a wheelchair to be sufficiently close to the table.

Section T306.3 addresses table clearance. This provision requires a 36-inch wide minimum clear floor or ground space surrounding the usable portions of a table, measured from the back edge of the seat, or the back edge of the table if no seat is provided.

Tables placed in buildings are generally expected to have ample space for moving around. This is not always the case where picnic tables are located in an outdoor environment. For that reason, the committee recommended a minimum clear floor or ground space that would provide maneuvering room beyond the accessible seating space to all usable portions of a table to allow for movement around the table.

Section T306.4 addresses clear spaces. Section T306.4.1 requires the surface of the clear floor or ground space and the wheelchair space to be firm and stable. Slip resistance is not required because of the tree leaves and needles, duff (partly decayed organic material on the forest floor), mud, snow, and ice that often cover outdoor areas. Exception 1 permits an exception from this requirement where at least one of the conditions of T302 applies.

Section T306.4.2 requires slopes of the required clear floor or ground spaces not to exceed 1:50 in any direction. Exceptions are provided to address the unique aspects of the outdoor environment. Natural and natural-appearing surfaces are often used in picnic areas. A 1:50 slope on these surfaces may not be adequate to ensure proper drainage. In these cases, exception 1 allows the slope in any direction to be 1:33 maximum. Exception 2 states that this provision does not have to be met where at least one of the conditions in section T302 applies.

T307 Fire Rings

Section T307.2 requires that a clear floor or ground space extending a minimum of 48 inches deep by 48 inches wide be provided at all usable portions of a fire ring. This clear floor or ground space exceeds what is generally required in the Architectural Barriers Act Accessibility Guidelines to allow both a forward and parallel approach and to provide more space to move away from the heat. Exception 1 permits the clear floor or ground space to be reduced to no less than 36 inches deep by 36 inches wide when one of the conditions in T302 exists. A clear floor or ground space of less than 36 inches by 36 inches at accessible fire rings could pose a safety hazard to users. As a result, no exception is provided to further reduce the clear floor or ground space to less than 36 inches by 36 inches.

The surface and slope requirements of the clear spaces required by T307.2 must comply with T306.4. Many of the elements included in this rule share the same requirements for the surface and slope of clear spaces. A discussion regarding this requirement is included in the preamble discussion for T306.4.

Section T307.3 requires the fire surface height to be 9 inches minimum above the ground or floor and is inconsistent with the Architectural Barriers Act Accessibility Guidelines specifications for a low side reach which is 15 inches.

Section T307.4 addresses raised edges around fire rings. Where a raised edge or curb is provided around a fire ring, this provision would require that the combined reach over the edge or curb and down to the fire building surface must be 24 inches maximum.

T308 Cooking Surfaces, Grills, and Pedestal Grills

The surface and slope requirements of the clear spaces required by T308.2 must comply with T306.4. Many of the elements included in this rule share the same requirements for the surface and slope of clear spaces. A discussion regarding this requirement is included in the preamble discussion for T306.4.

Section T308.3 requires accessible cooking surfaces to be installed between 15 inches and 34 inches above the ground or floor. This provides a comfortable reach range for cooking.

Section T308.4 requires operating controls and mechanisms to comply with T407.

T309 Fixed Trash and Recycling Containers

The surface and slope requirements of the clear spaces required by T309.2 must comply with T306.4. Many of the elements included in this rule share the same requirements for the surface and slope of clear spaces. A discussion regarding this requirement is included in the preamble discussion for T306.4. Section T309.3 requires operating controls for the containers to comply with T407.2 and T407.3. However, an exemption from this requirement is provided where the container has a hinged, sliding, or other cover and is situated where it is subject to large animal intrusion, thus dictating animal-resistant controls. Current designs for controls and operating mechanisms preclude providing secure storage of trash or recycled material from large animals, and still meet the reach and operating force requirements of T407.3.

T310 Wood Stoves and Fireplaces

The surface and slope requirements of the clear spaces required by T310.2 must comply with T306.4. Many of the elements included in this rule share the same requirements for the surface and slope of clear spaces. A discussion regarding this requirement is included in the preamble discussion for T306.4.

Section T310.2 requires that a clear floor or ground space 48 inches deep minimum and 48 inches wide minimum be provided from all usable portions of the wood stove or fireplace. This is consistent with space requirements for other elements in outdoor developed facilities, such as fire rings and grills. The 48 inch requirement allows for a front and side approach. The committee agreed that the extra space required beyond 30 inches by 48 inches is warranted in this case where safety is paramount. An exception is provided to reduce this requirement to 36 inches minimum depth where one or more of the conditions in section T302 exist.

Section T310.3 requires the controls for operation of wood stoves and fireplaces to comply with T407.

Question 24: Are there controls and operating mechanisms available for fireplaces that will meet the requirements of T407? If not, what modifications will allow for most operating mechanisms of woodstoves and fireplaces to meet this provision?

T311 Overlooks and Viewing Areas

Section T311.2 requires at least one turning space with a circular or T-shaped space complying T402. The surface and slope requirements of the turning spaces required by T311.2 must comply with T306.4. Many of the elements included in this rule share the same requirements for the surface and slope of clear spaces. A discussion regarding this requirement is included in the preamble discussion for T306.4.

Section T311.3 requires that each location providing a viewing opportunity to one or more distinct points of interest must have at least one unrestricted viewing area for each viewing opportunity. The committee felt that the attraction of a viewing area is to bring persons to a place where they can enjoy all the aspects of the site and persons with disabilities should have the opportunity to experience the attraction. The committee determined that an arc extending from 32 inches minimum above the level surface of the viewing area to 51 inches maximum above the surface would be sufficient to allow an unobstructed view. Often the overlook or the viewing area has an adjacent drop-off that would present a hazard to the user of the area. Safety barriers are often installed (such as a guardrail, railing, or wall) to protect the visitor from the edge and may block the view. This provision requires an unobstructed view to the distinct point of interest. There must be a means by which a field of view in the described arc is obtained. Various designs or recommendations to manage this are provided in the advisory, and include see-through panels in walls or elevated platforms away from the guarded edge. A periscope complying with T212.1 is also an option for a view over a barrier. This provision does not apply where one of the conditions in T302 exists.

T312 Telescopes and Periscopes

Section T312.2 requires the surface conditions of the clear floor or ground space adjacent to the telescope or periscope to be firm and stable, and comply with the clear space requirement of T403. In the interest of safety and the ability to use the elements in an unchanging and balanced condition, a dependable surface condition is a necessity.

Section T312.2 also requires the slope of the required clear floor or ground space to not exceed 1:50 in any direction, unless the surface condition is such that drainage is a problem. Where drainage is of concern, a 1:33 maximum slope is permitted. Drainage from the area adjacent to the elements is essential to preserve the integrity of the surface condition and to provide a comfortable location to use the elements.

Section T312.3 requires the controls and operating mechanisms of telescopes and periscopes to comply with T407.

Section T312.4 requires the eye piece to be usable from a seated position so that each distinct point of interest is viewable. This will provide the widest range of viewing opportunities, not only for seated individuals but also for children. An advisory provides suggestions on how to accomplish this. Options include an adjustable scope mount, a swivel seat or installing an element that would allow for a high/low option similar to what is offered for water fountains. The requirement for use from the seated position is necessary for people using wheelchairs and other mobility devices. The committee recognized that this may also benefit children or individuals of short stature.

T313 Fixed Benches

Section T313.2 requires the surface and slope requirements of the clear spaces to comply with T306.4. Many of the elements included in this rule share the same requirements for the surface and slope of clear spaces. A discussion regarding this requirement is included in the preamble discussion for T306.4.

Section T313.2 also requires that clear spaces be located at one end of the accessible bench, and not overlap other clear floor or ground space requirements. The committee debated the location of the clear floor or ground space, recognizing that many different configurations could exist. The requirement of a clear floor or ground space at one end without intruding into other clear floor or ground spaces provides users with the same perspective as the occupant of the bench, no matter which direction the bench is facing and avoids obstructing the outdoor recreation access route. Shoulder-to-shoulder alignment of the clear floor or ground space enhances the opportunity for and ease of interaction or conversation with someone seated on the bench.

Section T313.3 requires that the top of the seat surface be between 17 inches and 19 inches above the ground or floor space to facilitate transfer. This provision is consistent with the Architectural Barriers Act Accessibility Guidelines.

Section T313.4 addresses back support. Back support is required on accessible benches and must extend the full length of the bench.

Section T313.5 addresses armrests. Where required by T213.2, at least one armrest is required on a single bench. Section T213.2.2 requires armrests where multiple benches are provided. All armrests must comply with T411.8. This will facilitate transfer to the bench

and provide support to maneuver to or from the bench seat.

T314 Utility Sinks

Section T314.2 requires a clear floor or ground space complying with T403.1 to be provided at the sink for adequate reach and turning space. Section T314.2 requires that the clear floor or ground space not have a slope greater than 1:50. An exception permits the slope of the clear floor or ground space to be 1:33 maximum to provide proper drainage. Section T314.2 also requires that the surface of the clear floor space be firm and stable.

Section T314.3 requires the height of the counter or rim to be 34 inches maximum above the floor or ground surface.

Section T314.4 requires the depth of the bowl to be 15 inches minimum above the floor or ground surface. The committee recognized that there may be some difficulty in providing a deep enough sink to accomplish the purposes of cleaning larger pots or pans given current reach range requirements. However, the committee believed that adhering to the established reach ranges was important.

Section T314.5 requires operable parts of the sink to comply with T407.

T315 Mobility Device Storage Facilities

Section T315.2 requires the surface and slope requirements of the clear spaces to comply with T306.4. Many of the elements included in this rule share the same requirements for the surface and slope of clear spaces. A discussion regarding this requirement is included in the preamble discussion for T306.4.

Section T315.3 requires that the size of the storage space be 38 inches minimum in height, 28 inches minimum in width and 40 inches minimum in length. These dimensions are based on the space needed for a collapsed standard adult wheelchair. The committee agreed that a wheelchair would be the most commonly occurring device which would require storage and based the requirements accordingly.

Section T315.4 requires controls and operating mechanisms for accessible mobility storage facilities to comply with T407.

T316 Pit Toilets

Section T316.2 requires the surface and slope requirements of the clear spaces to comply with T306.4. Many of the elements included in this rule share the same requirements for the surface and slope of clear spaces. A discussion regarding this requirement is included in the preamble discussion for T306.4.

Section T316.2 also requires compliance T409. Where one of the conditions in T302 applies, exception 1 permits the size of the clear floor or ground space to be reduced to 48 inches by 48 inches. Where a 48 inch by 48 inch clear floor or ground space cannot be provided because at least one of the conditions of T302 applies, exception 2 does not require compliance with T316.2.

Section T316.3 requires the height of the pit toilet seat to comply with T409.4. No exceptions for the outdoor environment were necessary.

Section T316.4 requires grab bars complying with T411 only where the pit toilets are provided with walls. Since many pit toilets consist of a riser placed on the ground, the committee agreed that the requirement for grab bars should only be triggered if a structure surrounds the riser.

T317 Utilities

Section T317.2 requires the slopes of clear floor or ground spaces at utilities to have a 1:50 maximum slope in any direction. Where surface conditions require a slope greater than 1:50 for proper drainage, an exception permits a 1:33 maximum slope. Section T317.2 also requires the surface of the clear floor or ground space to be firm and stable.

Section T317.3 requires fixed water spouts to be located 28 inches minimum to 36 inches maximum above the ground or floor surface and to be centered at the edge of a 60 inch minimum by 60 inch minimum clear floor or ground space.

Section 317.4 requires controls and operating mechanisms associated with utilities to comply with T407. Exception 1 does not apply T407 to sewage hookups. Exception 2 exempts hand pumps from T407.3. The rationale for not requiring sewer hookups to meet height and reach range provisions is based on their ground level location necessary for gravity drainage. Most are foot drains or have a small handle at the ground level to open the connection to the system.

T318 Camping Facilities

Section T318.2 addresses accessible camping space parking. Section T318.2.1 requires accessible recreational camping vehicle or trailer camping spaces to be 20 feet minimum in width. This was determined to be necessary to accommodate existing equipment manufactured by the recreational camping vehicle industry and lifts required to gain access out of and into this equipment. The extra width associated with this parking space is necessary to provide 3 feet of space on the driver's side for access to utilities. The parking space is 9 feet to allow for vehicle width and an 8 foot space on the passenger side for deployment of a lift with room to exit conveniently. An exception permits one space to be 16 feet minimum in width, where only two accessible parking spaces are required. The exception allows a smaller parking pad (van size) for the second accessible campsite. This deviation will limit the impact on the environment and the user's experience.

Section T318.2.2 addresses tent camping spaces and camp shelter spaces. Where parking is provided, a tent camping and camp shelter parking space 16 feet wide is required and follows the Architectural Barriers Act Accessibility Guidelines for van accessible parking spaces which would accommodate the maximum size vehicle used for this type of campsite. A ''camp shelter'' also includes cabin accommodations.

Section T318.2.3 requires recreation camping vehicle and trailer parking spaces located in general use parking areas to be 12 feet minimum wide and to have an adjacent access aisle of 8 feet extending the full length of the parking space. The surface of the parking space and access aisle must be firm and stable.

Section T318.2.4 requires that the slope of an accessible parking space not exceed 1:50 in any direction. Where surface conditions require a greater slope for proper drainage, an exception permits a 1:33 maximum slope.

Section T318.3 addresses tent pads and tent platforms. Section T318.3.1 addresses clear space. A 48 inch clear space around the tent pad is required to allow both side and front approach access to assembling equipment. An exception allows the clear space to be reduced to 36 inches where at least one of the conditions in T302 applies.

Section T318.3.2 requires the tent pad surface to be firm and stable, consistent with other provisions in Chapters T2 and T3. An exception is permitted where at least one of the four conditions specified in T302 exist.

Section T318.3.3 requires that the slope of the tent pad or platform not exceed 1:50 in any direction. An exception permits a 1:33 maximum slope where necessary for proper drainage.

Section T318.3.4 requires edge protection to be 3 inches minimum where a raised tent platform is provided. The 3 inch minimum is necessary to ensure visibility and to prevent wheelchairs and other mobility devices from rolling off the raised platform.

Section T318.3.5 addresses the connection where a tent platform is raised above grade to provide a level surface to pitch a tent. Access is provided in a similar fashion to playground equipment by a transfer system including a platform and transfer steps. The need for mobility equipment on the platform surface was not deemed to be necessary for use, as the surface area is the same size as the tent.

T319 Warming Huts

Section T319.1 requires warming huts to provide a turning space that complies with T402 and if a door is provided that it comply with T408.

T320 Outdoor Rinsing Showers

Section T320.2 addresses the requirement for clear space. A clear space which would permit a front or parallel approach is necessary in order to make the shower usable. For most elements, such as a telephone or drinking fountain, a 30 inch by 48 inch clear floor space would suffice. Committee members agreed that only providing a front approach without a 5 foot turnaround space would not allow someone in a wheelchair to turn 360 degrees to rinse off under all angles of the water. For ease and convenience of use for people using wheelchairs, the full turnaround space must be provided.

Section T320.2 also addresses the requirement for slope. The committee recommended that the slope of the clear space not exceed 1:33 in all directions. This is consistent with recommendations by the committee for other outdoor elements where drainage is a concern. Many park maintenance managers indicated that a 1:20 slope is required for the floors of outdoor showers to ensure proper drainage. The committee believed that the increase to 1:33 would suffice and allow for a reasonable tolerance.

Section T320.3 addresses the requirements for grab bars. Grab bars are typically not found in outdoor showers, primarily because the majority of the showers are free-standing poles and there is no place to mount a grab bar which conforms to the Architectural Barriers Act Accessibility Guidelines. Nonetheless, the committee believed that a grab bar was essential for stability in a wet environment, but not for transfer. The committee also recommended providing three options for the grab bar: vertical, circular (if the shower is on a pole), and horizontal (if the shower is on a wall). If a vertical grab bar is chosen it would be permitted only on a post. The committee recommended that it be provided 33 inches above the floor, the lowest height currently for a grab bar, and extend the length of the pole within 3 inches below the shower head. If a circular grab bar is chosen it would also be permitted only on a post. This type of grab bar would resemble a spoked wheel mounted perpendicular to the post. The committee recommended that the grab bar be provided 33 to 36 inches above the floor, consistent with a horizontal grab bar in an indoor shower. If a horizontal grab bar is chosen, the committee recommended a 33 to 36 inch mounting height, consistent with the mounting height for horizontal grab bars in indoor showers.

Section T320.4 addresses the requirements for controls. In order for controls to be usable, they must be within reach ranges and be operable. The committee recommended that controls comply with T407. Many outdoor showers have a twist-type knob because those controls are less subject to vandalism. Although vandalism is a legitimate concern in outdoor settings, the committee agreed that accessible controls could be vandal-proofed, particularly if push controls are used. Therefore, the committee recommended that controls and operating mechanism comply with T407. If self-closing controls are used, the controls shall remain open for at least 10 seconds, the minimum time needed for rinsing.

Section T320.5 addresses the requirements for a low outdoor rinsing shower spray head. The appropriate height for a low rinsing shower is taken from the current requirements for indoor showers. In order to provide flexibility, rather than an absolute mounting height, the committee recommended a range of 48 to 54 inches. A hand-held shower spray unit is permitted, although the committee realized that this would be an infrequent choice in an outdoor environment due to vandalism concerns.

Section T320.6 addresses the requirement for the height of a high outdoor rinsing shower spray head. The height of the shower head must be a minimum of 72 inches above the floor or ground. A hand-held shower spray is permitted.

The committee also discussed shower seats. Indoor showers which are designated as accessible require a seat. This requirement may not be reasonable for all outdoor showers. An adjacent bench might be conveniently located for the placement of items, but not in conjunction with showering itself. With an outdoor pole shower, there is no adjacent wall on which to mount a fold-down seat. In an outdoor shower mounted to a wall, a fold-down bench would likely be vandalized. Therefore, the committee recommended that there be no requirement for a shower seat in an outdoor rinsing shower.

T321 Signs

Section T321.2 requires trails or trail segments that comply with T303 to provide a sign at the trail head and all designated access points. The sign must display a symbol designating that the trail or trail segment is accessible and shall include the total distance of the accessible trail or segment and the location of the first point where exceptions from the technical provision in T303 apply.

An example of a sign to be used at accessible trails is included in an advisory note. Signs identifying accessible trail segments must include the total distance of the accessible segment and the location of the first point of departure from the technical provisions.

Signs for trails were extensively debated by the committee. While certain trail information is critical for users, there was concern about requiring too many signs with too much information. There were also concerns that the requirement may be too onerous in terms of providing detailed information about trail characteristics. As a compromise, the committee agreed to include a requirement for a symbol to identify those trails that are accessible. Additionally, where the symbol is used to identify accessible trail segments, the total distance of the accessible trail segment to the location of the first point of departure from the technical provision must be provided.

An extensive advisory note has been provided on the issue of trail information. The advisory note includes recommendations for the types of information which should be provided and examples of different formats for providing the information. Where trails are provided and conditions have required departure from some of the technical provisions, it is recommended that more detailed signs be provided to help users make informed decisions about trail use.

Question 25: Some examples of proposed signs designating accessible trails are included in an advisory note. The committee did not reach a consensus on a particular sign. Comment is sought on these signs and other options. The proposed guidelines for trails require a sign on trails that meet the provisions and exceptions of T303.

Section T321.3 requires camping spaces that comply with T318 to be

identified by the International Symbol of Accessibility complying with T412.2.

T322 Protruding Objects

Section T322.1 requires protruding objects on trails, outdoor recreation access routes, and beach access routes to comply with T405. Protruding objects on trails must have 80 inches of vertical clearance. An exception permits a reduction in the 80 inch vertical clearance provided that a barrier is provided to warn persons with visual impairments. This allows a trail to pass through narrow, winding corridors, under ledges or through caves. This provision represents a compromise reached by committee members. Some committee members saw the need for a departure from the minimum 80 inches overhead clearance, while others felt that permitting this could present barriers to people with visual impairments.

Question 26: The committee could not reach consensus on allowing a complete departure from this provision if the minimum overhead clearance could not be provided along a trail. After some debate, the committee agreed to propose the technical requirements for headroom clearance. Providing such a warning along a trail in the outdoor environment may have the effect of creating a barrier for all trail users. What other options are available on trails, specifically where there is a lack of sufficient space to move around an obstruction without significantly impacting the natural environment or setting?

Chapter T4

Chapter T4 provides supplementary technical provisions that apply where required by Chapter T3 or where referenced by a requirement in this document.

Regulatory Process Matters

These guidelines have been reviewed by the Office of Management and Budget pursuant to Executive Order 12866. The Access Board prepared a regulatory assessment for the guidelines. The regulatory assessment is available on the Access Board's Web site at *http://www.access-board.gov/outdoor/assessment.htm.* The guidelines apply to the new construction and alteration of outdoor developed areas by Federal agencies subject to the Architectural Barriers Act. The guidelines will primarily affect the following Federal land management agencies in the Department of Agriculture: Forest Service; in the Department of the Interior: National Park Service, Fish and Wildlife Service, Bureau of Land Management, and Bureau of Reclamation; and in the Department of Defense: Army Corps of Engineers.

Establishing the Federal land management agencies annual expenditures on the construction and alterations of the elements and spaces covered by the proposed guidelines required a project-by-project review. The Access Board requested data from the Federal land management agencies on camping and picnic projects and trails projects funded in FY 2004 that included elements and spaces covered by the proposed guidelines. The data is summarized in Table 1. Some of the projects included the construction and alterations of general parking areas, restrooms, and other facilities covered by existing accessibility standards, or the construction and alterations of roads and other infrastructure that are not subject to accessibility standards. Thus, the total project costs overstate the expenditures on elements and spaces covered by the proposed guidelines.

TABLE 1.—FY 2004 PROJECTS THAT INCLUDED CONSTRUCTION AND ALTERATIONS OF ELEMENTS AND SPACES COVERED BY PROPOSED GUIDELINES

Agency	Camping & picnic areas		Trails	
	Number of projects	Total project costs	Number of projects	Total project costs
Department of Agriculture				
Forest Service	Not available	$6.9 million (FY 2003)	Not available.	Not available.
Department of the Interior:				
National Park Service	46	$14.0 million	33	$2.7 million.
Fish and Wildlife Service	2	$0.2 million	3	$0.3 million.
Bureau of Land Management	6	$1.8 million	1	$25,000.
Bureau of Reclamation	8	$1.1 million	3	$1.2 million.
Department of Defense:				
Army Corps of Engineers	25	Not available	4	$1 million.
Total	87	$24.0 million	44	$5.2 million.

The Access Board reviewed 43 camping and picnic area projects and 26 trail projects that included the construction or alteration of elements and spaces covered by the accessibility guidelines for outdoor developed areas for this regulatory assessment, as shown in Table 2. The purpose of the review was to assess the level of accessibility of the elements and spaces, and the additional costs associated with accessibility.

TABLE 2.—PROJECTS REVIEWED FOR REGULATORY ASSESSMENT

Agency	Camping & picnic area projects	Trail projects
Department of Agriculture:		
Forest Service	12	4
Department of the Interior:		
National Park Service	9	11
Fish and Wildlife Service	2	3
Bureau of Land Management	6	1
Bureau of Reclamation	8	3
Department of Defense:		

TABLE 2.—PROJECTS REVIEWED FOR REGULATORY ASSESSMENT—Continued

Agency	Camping & picnic area projects	Trail projects
Army Corps of Engineers ..	6	4
Total	43	26

The Access Board used two baselines for this regulatory assessment. The first baseline assesses the costs associated with the proposed guidelines compared to the Federal land management agencies current accessibility policies and practices as described below:

• *Forest Service—FSORAG and FSTAG.* The Forest Service currently requires all its construction and alteration projects to use Forest Service Outdoor Recreation Accessibility Guidelines (FSORAG) and Forest Service Trail Accessibility Guidelines (FSTAG). FSORAG and FSTAG generally meet or exceed the level of accessibility in the proposed guidelines. Thus, the Forest Service's projects will not incur any additional costs associated with the proposed guidelines compared to FSORAG and FSTAG.

• *Department of the Interior—Best Practices Bulletins.* The Federal land management agencies in the Department of the Interior currently use the National Center on Accessibility's best practices bulletins. However, the agencies have not formally required all their construction and alteration projects to use the technical bulletins. Therefore, the baseline assumes 50 percent to 75 percent of the agencies' projects use the best practices bulletins. The best practices bulletins generally meet the level of accessibility in the proposed guidelines. Thus, the percentage of the agencies' projects that will incur additional costs associated with the proposed guidelines range from a lower bound of 25 percent to an upper bound of 50 percent.

• *Army Corps of Engineers—Recreation Facility and Customer Service Standards and Best Practices.* The Army Corps of Engineers currently require all its construction and alteration projects to use its Recreation Facility and Customer Service Standards, and also currently recommends that the projects use best practices for accessible design. The Army Corps of Engineers' Recreation Facility and Customer Service Standards generally meet or exceed the level of accessibility in the proposed guidelines, except for recreational vehicle parking areas and trails. The baseline assumes 50 percent to 75 percent of the Army Corps of Engineers' projects use best practices for designing accessible recreational vehicle parking areas and trails that meet the level of accessibility in the proposed guidelines. Thus, the percentage of the Army Corps of Engineers' projects that will incur additional costs for recreational vehicle parking areas and trails associated with the proposed guidelines range from a lower bound of 25 percent to an upper bound of 50 percent.

The additional annual costs associated with the proposed guidelines compared to the Federal land management agencies current accessibility policies and practices range from $0.5 million to $1.1 million.

The second baseline assesses the costs associated with the proposed guidelines if accessibility were not required by the Access Board or otherwise. That is, the second baseline attempts to evaluate how the Federal land management's agencies would construct the elements and spaces covered by the proposed guidelines in the absence of any accessibility requirement. The additional annual costs associated with the proposed guidelines using the second baseline range from $2.0 million to $2.6 million.

Individuals with disabilities, and their families and friends, will benefit from visiting and using accessible facilities in outdoor developed areas. The U.S. Census Bureau reports that there are 51.2 million Americans with disabilities in the civilian non-institutionalized population in 2002. Among the population age 15 and older, 2.7 million individuals use a wheelchair, and another 9.1 million use a mobility aid such as a cane, crutches, or walker. The benefits to individuals with disabilities are not quantifiable. Many of the benefits to these individuals resulting from accessible facilities in outdoor developed areas are currently being realized under the Federal land management agencies' current accessibility policies and practices. The proposed guidelines will contribute to the benefits, and the benefits justify the regulatory action.

The proposed guidelines will not have a significant economic impact on a substantial number of small entities for purposes of the Regulatory Flexibility Act because the guidelines apply only to Federal agencies. The proposed guidelines do not have any Federalism implications because they do not apply to State, local, and tribal governments. The proposed guidelines do not establish any requirements subject to the Paperwork Reduction Act.

List of Subjects in 36 CFR Part 1195

Buildings and facilities, Individuals with disabilities.

Tricia Mason,

Chair, Architectural and Transportation Barriers Compliance Board.

For the reasons set forth in the preamble, the Access Board proposes to add part 1195 to Chapter XI of title 36 of the Code of Federal Regulations to read as follows:

PART 1195—ARCHITECTURAL BARRIERS ACT ACCESSIBILITY GUIDELINES FOR OUTDOOR DEVELOPED AREAS

Sec.
1195.1 Accessibility guidelines.
Appendix A to Part 1195—Architectural Barriers Act Accessibility Guidelines for Outdoor Developed Areas

Authority: 29 U.S.C. 792(b)(3).

§ 1195.1 Accessibility guidelines.

The accessibility guidelines for outdoor developed areas designed, constructed, or altered by or on behalf of Federal agencies subject to the Architectural Barriers Act are set forth in Appendix A to this part.

Appendix A to Part 1195—Architectural Barriers Act Accessibility Guidelines for Outdoor Developed Areas

BILLING CODE 8190–01–P

CHAPTER T1: APPLICATION AND ADMINISTRATION **1**

T101 Purpose 1
T102 Modifications and Waivers 1
T103 Conventions 1
T104 Definitions 3

CHAPTER T2: SCOPING REQUIREMENTS **4**

T201 Application 4
T202 Additions and Alterations to Existing Facilities 4
T203 Trails 6
T204 Outdoor Recreation Access Routes 6
T205 Beach Access Routes 7
T206 Picnic Tables 7
T207 Fire Rings 8
T208 Cooking Surfaces, Grills, and Pedestal Grills 9
T209 Trash and Recycling Containers 9
T210 Wood Stoves and Fireplaces 9
T211 Overlooks and Viewing Areas 9
T212 Telescopes and Periscopes 9
T213 Benches 9
T214 Utility Sinks 10
T215 Mobility Device Storage Facilities 10
T216 Pit Toilets 10
T217 Utilities 10
T218 Camping Facilities 10
T219 Warming Huts 11
T220 Outdoor Rinsing Showers 11
T221 Signs 12
T222 Protruding Objects 12

CHAPTER T3: TECHNICAL PROVISIONS **13**

T301 General 13
T302 Conditions for Exceptions 13
T303 Trails 16
T304 Outdoor Recreation Access Routes 22
T305 Beach Access Routes 25
T306 Picnic Tables 27
T307 Fire Rings 28
T308 Cooking Surfaces, Grills, and Pedestal Grills 28
T309 Trash and Recycling Containers 29
T310 Wood Stoves and Fireplaces 29
T311 Overlooks and Viewing Areas 29
T312 Telescopes and Periscopes 30
T313 Fixed Benches 30
T314 Utility Sinks 31
T315 Mobility Device Storage Facilities 31
T316 Pit Toilets 31
T317 Utilities 32

T318 Camping Facilities 32
T319 Warming Huts 33
T320 Outdoor Rinsing Showers 33
T321 Signs 34
T322 Protruding Objects 39

CHAPTER T4: SUPPLEMENTARY TECHNICAL PROVISIONS 40

T401 General 40
T402 Turning Space 40
T403 Clear Floor or Ground Space 40
T404 Knee and Toe Clearance 41
T405 Protruding Objects 43
T406 Reach Ranges 44
T407 Operable Parts 47
T408 Doors, Doorways, and Gate 47
T409 Pit Toilets 54
T410 Shower Spray Unit 57
T411 Grab Bar 57
T412 Symbol of Accessibility 59

CHAPTER T1: APPLICATION AND ADMINISTRATION

T101 Purpose

This document contains scoping and technical requirements for accessibility to outdoor developed areas by individuals with disabilities. These requirements are to be applied during the design, construction, additions to, and alterations of outdoor developed areas by Federal agencies when adopted as standards pursuant to the Architectural Barriers Act.

> **Advisory T101 Purpose.** It is recognized that compliance with this document may not necessarily result in an accessible facility for all persons with disabilities. The intent is to ensure that accessibility is considered for all newly constructed and altered trails and other outdoor elements, recognizing that natural environments may not always be compatible with fully accessible facilities.

T102 Modifications and Waivers

The Architectural Barriers Act authorizes the Administrator of the General Services Administration, the Secretary of the Department of Housing and Urban Development, the Secretary of the Department of Defense, and the United States Postal Service to modify or waive the accessibility standards for facilities covered by the Architectural Barriers Act on a case-by-case basis, upon application made by the head of the department, agency, or instrumentality of the United States concerned. The General Services Administration, the Department of Housing and Urban Development, the Department of Defense, and the United States Postal Service may grant a modification or waiver only upon a determination that it is clearly necessary. Section 502(b)(1) of the Rehabilitation Act of 1973 authorizes the Access Board to ensure that modifications and waivers are based on findings of fact and are not inconsistent with the Architectural Barriers Act.

T103 Conventions

T103.1 Dimensions. Dimensions that are not stated as “maximum” or “minimum” are absolute.

T103.1.1 Construction and Manufacturing Tolerances. All dimensions are subject to conventional industry tolerances except where the requirement is stated as a range with specific minimum and maximum end points.

T103.2 Calculation of Percentages. Where the required number of elements or facilities to be provided is determined by calculations of ratios or percentages and remainders or fractions result, the next greater whole number of such elements or facilities shall be provided. Where the determination of the required size or dimension of an element or facility involves ratios or percentages, rounding down for values less than one half shall be permitted.

T103.3 Figures. Unless specifically stated otherwise, figures are provided for informational purposes only.

Convention	Description
36 / 915	dimension showing English units (in inches unless otherwise specified) above the line and SI units (in millimeters unless otherwise specified) below the line
6 / 150	dimension for small measurements
33-36 / 840-915	dimension showing a range with minimum - maximum
min	minimum
max	maximum
>	greater than
≥	greater than or equal to
<	less than
≤	less than or equal to
	boundary of clear floor space or maneuvering clearance
℄	centerline
	a permitted element or its extension
	direction of travel or approach
	a wall, floor, ceiling or other element cut in section or plan
	a highlighted element in elevation or plan
	location zone of element, control or feature

Figure T103
Graphic Convention for Figures

T104 Definitions

T104.1 General. For the purpose of this document, the terms defined in T104.4 have the indicated meaning.

T104.2 Undefined Terms. The meaning of terms not specifically defined in T104.4 or in regulations issued by Federal agencies shall be as defined by collegiate dictionaries in the sense that the context implies.

T104.3 Interchangeability. Words, terms and phrases used in the singular include the plural and those used in the plural include the singular.

T104.4 Defined Terms

Alteration. A change to a facility or site that affects or could affect the usability of the facility or site or portion thereof. Normal maintenance and repair, including but not limited to removal of debris and maintenance of a trail head structure are not alterations unless they affect the usability of the facility or site.

Beach Access Route. A continuous unobstructed path designated for pedestrian use that crosses the surface of the beach.

Designated Trailhead. A designated point of access that may contain a parking area, information kiosks, restrooms, water hydrants, and may be reached by vehicular or pedestrian access.

Facility. All or any portion of buildings, structures, site improvements, elements and pedestrian routes or vehicular ways located on a site.

Outdoor Recreation Access Route. A continuous unobstructed path designated for pedestrian use that connects accessible elements within a picnic area, camping area, or designated trailhead.

Trail. A route that is designed, constructed, or designated for recreational pedestrian use or provided as an pedestrian alternative to vehicular routes within a transportation system.

Tread Width. The path or visible trail surface perpendicular to the direction of travel. The clear tread width of the trail is the width of the usable trail tread, measured perpendicular to the direction of travel and on or parallel to the surface of the usable trail tread. The minimum clear tread width is the narrowest measurement on the usable trail tread.

CHAPTER T2: SCOPING REQUIREMENTS

T201 Application

T201.1 Scope. All newly designed and constructed trails, outdoor recreation access routes, beach access routes, and picnic and camping facilities and altered portions of existing trails, outdoor recreation access routes, beach access routes, and picnic and camping facilities shall comply with these requirements.

T201.2 Application Based on Building or Facility Use. Where a facility or site contains more than one use, each portion shall comply with the applicable requirements for that use.

T201.3 Temporary and Permanent Facilities. These requirements shall apply to temporary and permanent facilities.

T201.4 Requirements for Buildings and Facilities. All areas of newly designed and newly constructed buildings and facilities and altered portions of existing buildings and facilities subject to the Architectural Barriers Act Accessibility Guidelines in Appendices C and D to 36 CFR part 1191 shall comply with the applicable requirements in that document.

> **Advisory T201.4 Requirements for Buildings and Facilities.** Other constructed elements and spaces such as toilet and bathing facilities, vault toilets, parking facilities, and visitor centers are already addressed in the ABA Accessibility Guidelines. Additionally, recreation facilities such as fishing piers and platforms, recreation boating facilities, and swimming pools and spas, are also addressed.

T202 Additions and Alterations to Existing Facilities

T202.1 General. Additions and alterations to existing facilities shall comply with T202.

T202.2 Additions. Each addition to an existing facility shall comply with the requirements for new construction.

T202.3 Alterations. Where existing trails connecting to designated trailheads or accessible trails are altered, they shall comply with Chapter T2. Where existing picnic and camping elements or spaces, outdoor recreation access routes or beach access routes are altered, each altered element or space shall comply with the applicable requirements of Chapter T2.

EXCEPTIONS: 1. Where the circulation path to the altered element or space is not altered, an outdoor recreation access route shall not be required.

2. Where elements complying with T306 through T322 are altered and the ground surface is not altered, the ground surface shall not be required to comply with T306.4.

Advisory T202.3 Alterations. The following guidance is provided to assist designers and operators distinguish between actions considered "maintenance or repair" and those considered an "alteration." Where actions are considered an "alteration," certain technical provisions will apply. Routine or periodic maintenance activities do not trigger the technical and scoping provisions. For example, if an entirely new bridge were installed to replace a step stone crossing, the bridge would be required to comply with the relevant provisions. The trail on either side of the new bridge may not require modification.

As a general rule, alterations are performed to change the original purpose, intent, or design of a facility. Examples of actions that would be considered alterations include, but are not limited to:

- Installation of a new trail tread surface, bridge, boardwalk, railing, safety barrier, signage, and puncheon;
- Construction, reconstruction, or installation of a new trail segment, new built features such as restrooms or picnic areas, bridges, gates, benches, safety barriers, and steps;
- Removal of existing features;
- Hardening of trail surfaces; and
- Rerouting or widening a significant portion of an existing trail.

Maintenance and repair are performed to return a facility to the standards or conditions to which it was originally designed and built. This type of work is not an alteration because it does not change the original purpose, intent, or design of the facility. It is recognized that in outdoor environments, the ability to maintain a facility is usually much more limited than in the built environment. Except in highly developed areas, maintenance and repair occurs relatively infrequently. Examples of actions that would be considered maintenance and repair includes, but are not limited to:

- Removal of debris and vegetation such as downed trees or broken branches in the trailway, clearing the trail of encroaching brush or grasses, and removing rock slides;
- Maintenance of the trail tread such as filling ruts and entrenchments, reshaping the trail bed, repairing the trail surface and washouts, installing rip rap (rock placed to retain cut and fill slopes), and constructing retaining walls or cribbing to support the trail tread;
- Replacing or installing necessary drainage structures such as drainage dips, water bars, or culverts, and realigning sections of trail to deter erosion or avoid boggy or marshy areas; and
- Repair of trail and trailhead structures, including painting, removing graffiti, and replacement of deteriorated, damaged, or vandalized parts of structures such as sections of bridges, boardwalks, information kiosks, fencing, and railings.

Although not required, resource managers are encouraged to maximize the opportunity to improve the accessibility of outdoor facilities through maintenance and repair activities. Every time a facility is maintained, the opportunity to improve access is present.

T202.3.1 Prohibited Reduction in Access. An alteration that decreases or has the effect of decreasing the accessibility of a facility or site below the requirements for new construction in effect at the time of the alteration is prohibited.

T202.3.2 Extent of Application. An alteration of an existing facility or site shall not impose a requirement for accessibility greater than required for new construction.

T203 Trails

T203.1 General. Where trails connecting to designated trailheads or accessible trails are provided, they shall comply with T303. Where elements or spaces are provided on trails complying with T303, they shall comply with the applicable requirements of Chapter T2 and Chapter T3.

Advisory T203.1 General. These technical provisions apply only to newly designed and constructed trails, and altered portions of existing pedestrian trails that connect to an accessible trail or designated trailhead. Where new trails connect to existing inaccessible trails or do not connect to a designated trailhead, the technical provisions do not apply. However, trails should not be intentionally separated from an accessible trail or designated trailhead to avoid the technical provisions. Accessible elements complying with T306 through T322 located along a trail are not required to be connected by an outdoor recreation access route.

Trails include, but are not limited to, a trail through a forested park, a shared use path, or a back country trail. Trails covered by section T203 do not include pathways such as sidewalks, pathways in amusement parks, commercial theme parks, carnivals, or between buildings on college campuses. These exterior accessible routes are covered by the revised ABA accessibility guidelines.

A trail designed, designated, and constructed for pedestrian use may also have other uses, such as bicycling or in-line skating. Section T203 applies only to trails where travel on foot is one of the designated uses for which the trail was created. For example, a trail designed specifically for mountain biking would not be considered a “pedestrian trail” whether or not pedestrians actually use the trail. However, a multi-use trail designated for both hiking and mountain biking would be considered a pedestrian trail and subject to these provisions.

Many trails are used as non motorized transportation facilities. Users may include bicyclists and skaters as well as pedestrians. The accessibility guidelines for outdoor developed areas apply to these trails. However, bicyclists and skaters have design needs that may exceed the minimum guidelines for trails in some areas. Where there are differences, the more stringent provision should be applied.

T204 Outdoor Recreation Access Routes

T204.1 General. Outdoor recreation access routes shall be provided in accordance with T204 and shall comply with T304.

T204.2 Where Required. At least one outdoor recreation access route complying with T304 shall connect accessible elements and spaces within the area.

EXCEPTIONS: 1. Elements located on trails shall not be required to be connected by an outdoor recreation access route.

2. Where multiple picnic tables are provided in an area, at least 40 percent, but no fewer than two, of the picnic tables required by T206.2.2 shall be on an outdoor recreation access route.
3. Where multiple fire rings are provided in an area, at least 40 percent, but no fewer than two, of the fire rings required by T207.2.2 shall be on an outdoor recreation access route.
4. Where multiple cooking surfaces are provided in an area, at least 40 percent, but no fewer than two, of the cooking surfaces required by T208.2.2 shall be on an outdoor recreation access route.
5. Where multiple benches are provided in an area, at least 40 percent, but no fewer than two, of the benches required by T213.2.2 shall be on an outdoor recreation access route.

T204.3 Location. Outdoor recreation access routes shall coincide with or be located in the same area as general circulation paths.

T205 Beach Access Routes

T205.1 General. Beach access routes shall be provided in accordance with T205 and shall comply with T305.

T205.2 Where Required: New Beach. Where a beach is newly constructed, a minimum of one beach access route complying with T305 shall be provided for every one-half mile of linear feet of new beach.

T205.3 Where Required: Existing Beach. Where a route is provided for pedestrian use and constructed from a developed site to, or along the edge of, an existing beach, a beach access route complying with T305 shall be provided.

EXCEPTIONS: 1. A temporary beach access route shall be permitted.
2. Routes which are created solely for shoreline maintenance shall not be required to comply with T205.
3. Routes provided solely as undeveloped public easements shall not be required to comply with T205.
4. Where a beach access route exists within one-half mile and is within the beach of the same jurisdiction, a beach access route shall not be required.
5. When existing beaches are replenished for beach nourishment, a beach access route shall not be required.
6. A beach access route shall not be required where a route provided for pedestrian use along the edge of an existing beach is elevated 6 inches (150 mm) or higher above the beach surface.

T205.4 Location. Beach access routes shall coincide with or be located in the same area as general circulation paths.

T206 Picnic Tables

T206.1 General. Where picnic tables are provided, they shall comply with T206.

T206.2 Minimum Number

T206.2.1 Single Picnic Tables. Where one picnic table is provided in an area, the picnic table shall comply with T306.

T206.2.2 Multiple Picnic Tables. Where two or more picnic tables are provided in an area, at least 50 percent, but no fewer than two, of the picnic tables shall comply with T306.

> **Advisory T206.2.2 Multiple Picnic Tables.** Where two or more fixed picnic tables are provided in a picnic area, at least 50 percent, but never less than two, must comply with T306. An "area" refers to a designated location where picnic related elements are located. Areas may be separated and include different settings on the same site. For example, a picnic area located next to a lake in a park is considered a separate picnic area from a pavilion with numerous picnic tables within the same park. Picnic areas may also be separated and designated by a name or connected to a separate entrance.

T206.3 Dispersion. Picnic tables required by T206.2 shall be dispersed among the types of settings or opportunities provided. This provision shall not require an increase in the total number of picnic tables required by T206.

T206.4 Number of Wheelchair Spaces. Each picnic table required by T206.2 shall have at least one wheelchair space complying with T306.2. Where the table top perimeter exceeds 24 linear feet, wheelchair spaces shall be provided in accordance with Table T206.4.

Table T206.4 Wheelchair Spaces

Table Top Perimeter	Minimum Number of Wheelchair Spaces
25 lf -44 lf	2 spaces
45 lf - 64 lf	3 spaces
65 lf - 84 lf	4 spaces
85 lf - 104 lf	5 spaces

T207 Fire Rings

T207.1 General. Where provided, fire rings shall comply with T207.

T207.2 Minimum Number

T207.2.1 Single Fire Ring. Where one fire ring is provided in an area, the fire ring shall comply with T307.

T207.2.2 Multiple Fire Rings. Where two or more fire rings are provided in an area, at least 50 percent, but no fewer than two, of the fire rings shall comply with T307.

T207.3 Dispersion. Fire rings required by T207.2 shall be dispersed among the types provided. This provision does not require an increase in the total number of fire rings required by T207.2.

T208 Cooking Surfaces, Grills, and Pedestal Grills

T208.1 General. Where provided, cooking surfaces, grills, and pedestal grills shall comply with T208.

T208.2 Minimum Number

T208.2.1 Single Cooking Surface. Where one cooking surface, grill, or pedestal grill is provided in an area, the cooking surface, grill, or pedestal grill shall comply with T308.

T208.2.2 Multiple Cooking Surfaces. Where two or more cooking surfaces, grills, or pedestal grills are provided in an area, at least 50 percent, but no fewer than two, of the cooking surfaces, grills, or pedestal grills shall comply with T308.

T208.3 Dispersion. Cooking surfaces required by T208.2 shall be dispersed among the types provided. This provision does not require an increase in the total number of cooking surfaces required by T208.2.

T209 Trash and Recycling Containers

T209.1 General. Where trash and recycling containers are provided, each trash or recycling container shall comply with T309.

EXCEPTION: Fifty percent of the bins in multi-bin containers shall not be required to comply with T309.

T210 Wood Stoves and Fireplaces

T210.1 General. Where wood stoves and fireplaces are provided, each wood stove and fireplace shall comply with T310.

T211 Overlooks and Viewing Areas

T211.1 General. Where viewing areas are provided on designated overlooks, each viewing area shall comply with T311.

EXCEPTION: Where multiple viewing areas are provided at a designated overlook, at least one of each viewing opportunity for distinct points of interest shall be required to comply with T311.3.

T212 Telescopes and Periscopes

T212.1 General. Where telescopes or periscopes are provided in an area, at least 20 percent, but no fewer than one, of the telescopes or periscopes shall comply with T312. Where only one telescope or periscope is provided, it shall comply with T312 and shall also be usable from the standing position.

T213 Benches

T213.1 General. Where provided, benches shall comply with T213.

T213.2 Minimum Number.

T213.2.1 Single Bench. Where one bench is provided in an area, the bench shall comply with T313.

T213.2.2 Multiple Benches. Where two or more benches are provided in an area, at least 50 percent of the benches shall comply with T313.1 through T313.4. At least 50% of the benches required by T213.2.2 shall also comply with T313.5.

T213.3 Dispersion. Benches required by T213.2 shall be dispersed among the types provided. This provision does not require an increase in the total number of benches required by T213.2.

T214 Utility Sinks

T214.1 General. Where utility sinks are provided, at least 5 percent, but no fewer than one of each type of utility sinks provided in each area shall comply with T314.

T215 Mobility Device Storage Facilities

T215.1 General. Where storage facilities are provided and individuals using wheelchairs or other individual mobility devices transfer from one individual mobility device to another individual mobility device, at least one storage facility shall comply with T315.

T216 Pit Toilets

T216.1 General. Where pit toilets are provided, each pit toilet shall comply with T316.

T217 Utilities

T217.1 General. Where provided, electric, water, sewage and other similar type utilities serving accessible elements shall comply with T317.

T218 Camping Facilities

T218.1 General. Where recreational camping vehicle or trailer spaces, tent camping spaces, or camping shelters are provided, they shall comply with T218.

T218.2 Minimum Number. Recreational camping vehicle or trailer spaces, tent camping spaces, and camping shelters shall be provided in accordance with Table T218.2. Where picnic tables, fire rings, utilities, or other elements are provided in camping spaces required by T218.2, they shall comply with the applicable provisions of Chapters T2 and T3.

Table T218.2 Camping Spaces

Number of Camping Spaces	Minimum Number of Accessible Camping Spaces
1	1
2 to 25	2
26 to 50	3
51 to 75	4
76 to 100	5
101 to 150	7
151 to 200	8
201 to 300	10
301 to 400	12
401 to 500	13
501 to 1000	2 percent of total
1001 and over	20, plus 1 for each 100 over 1000

T218.2.1 Recreational Camping Vehicle and Trailer Spaces. Recreational camping vehicle or trailer spaces required by T218.2 shall comply with T318.2.1 and T318.2.4.

EXCEPTION: Where camping spaces are designed for both tent camping and recreational camping vehicle or trailer use, at least 50 percent of the multi-use spaces required by T218 shall comply with T218.2.1 and the remainder shall be permitted to comply with T218.2.2.

T218.2.2 Tent Camping Spaces and Camp Shelters. Tent camping spaces and camp shelters required by T218.2 shall comply with T318.2.2, T318.2.4, and T318.3.

T218.3 General Use Parking Areas. In campgrounds with recreation camping vehicle or trailer spaces, at least one recreational camping vehicle or trailer parking space complying with T318.2.3 and T318.2.4 shall be provided in each general use parking area.

EXCEPTION: Recreational camping vehicle or trailer parking provided within individual camping spaces shall not be required to comply with T218.3.

T219 Warming Huts

T219.1 General. Where warming huts are provided, each warming hut shall comply with T319.

T220 Outdoor Rinsing Showers

T220.1 General. Where provided, outdoor rinsing showers shall comply with T220.

Advisory T220.1 Outdoor Rinsing Showers. Outdoor showers are usually rinsing facilities that permit people to wash off sand, water, dirt, or debris. They are not designed for bathing, as they generally do not offer privacy and people are usually not permitted to disrobe.

T220.2 Minimum Number.

T220.2.1 Single Rinsing Shower. Where one rinsing shower is provided, the rinsing shower shall comply with T320.1 through T320.4, and shall have a low shower spray head complying with T320.5 and a high shower spray head complying with T320.6.

T220.2.2 Multiple Rinsing Showers. Where two or more rinsing showers are provided at a location, at least one shall comply with T320.1 through T320.4 and shall have a low shower spray head complying with T320.5, and at least one shall comply with T320.1 through T320.4 and shall have a high shower spray head complying with T320.6.

T221 Signs

T221.1 Trails. Trails and trail segments complying with T303 shall be identified by signs complying with T321.2.

T221.2 Camping Spaces. Camping spaces complying with T318 shall be identified by signs complying with T321.3.

EXCEPTIONS: 1. Where all camping spaces in an area comply with T318, signs complying with T321.3 shall not be required.

2. Where camping spaces are assigned upon arrival or through a reservation system, signs complying with T321.3 shall not be required.

T222 Protruding Objects

T222.1 General. Protruding objects on trails, outdoor recreation access routes, and beach access routes shall comply with T322.

CHAPTER T3: TECHNICAL PROVISIONS

T301 General

T301.1 Scope. The provisions of Chapter T3 shall apply where required by Chapter T2 or where referenced by a requirement in this document.

T302 Conditions for Exceptions

T302.1 General. Where any of the conditions in T302 applies, the specific exceptions to the technical provisions in Chapter T3 shall be permitted. The conditions in T302 do not obviate or limit in any way the obligation to comply with the technical provisions in Chapter T3 at any point where the conditions do not apply.

> **Advisory T302.1 Conditions for Exceptions.** The conditions in T302 permit specific exceptions technical provision by technical provision and do not provide an overall exemption for the entire trail or outdoor element. A specific exception to a technical provision can be used only on that portion of the trail where the condition exists. For example, an exception to T303.4 permits the width of a trail to be reduced where a significant natural feature is located. However, the width of the trail before and after the significant area must meet T303.4, and all other technical provisions (except width where the significant natural feature is located) will apply throughout the full length of the trail.

Conditions 1. Compliance would cause substantial harm to cultural, historic, religious, or significant natural features or characteristics.

> **Advisory T302.1 Condition 1.** Compliance would cause substantial harm to cultural, historic, religious, or significant natural features or characteristics. Examples of this condition include areas protected under Federal, State, or local laws, with species designated as threatened or endangered, or with designated wetlands that could be threatened or destroyed by full compliance with the technical provisions. Significant cultural features may include areas such as archaeological sites, sacred lands, burial grounds and cemeteries, or Indian tribal protected sites. Significant historical features may include properties on or eligible for the National Register of Historical Places or other places of recognized historic value. Significant religious features may include sites sacred to Native Americans and other properties designated or held sacred by an organized religious belief or church. Significant natural features may include a large rock outcrop or a unique water feature.

2. Compliance would substantially alter the nature of the setting or the purpose of the facility, or portion of the facility.

> **Advisory T302.1 Condition 2.** Compliance would substantially alter the nature of the setting or the purpose of the facility, or portion of the facility. Examples of this condition include a trail intended to provide a rugged experience such as a cross country training trail

with a steep grade or a challenge course with abrupt and severe changes in level, where compliance with certain technical provisions would not provide the intended and desired level of challenge and difficulty to users. Other examples include trails that traverse over boulders and rocky outcrops where the purpose of the trail is to provide people with the opportunity to climb rocks. To remove the obstacles along the way or reroute the trail around the rocks would destroy the purpose of the trail.

Furthermore, compliance is not intended to negatively impact the unique characteristics of the natural setting. People using primitive trails, for example, expect to experience the outdoor environment in a more natural state with limited or no development. Evidence of manufactured building materials or engineered construction techniques in such a setting could change its primitive character, and therefore, the user's experience. In these settings, compliance with specific technical provisions, for example those related to surface and tread obstacles, could destroy the 'natural' or 'undeveloped' nature of the setting. Actions may also compromise the 'nature of the setting' such as constructing an imported surface on a trail in a remote location or removing ground vegetation in meadows or alpine areas.

3. Compliance would require construction methods or materials that are prohibited by federal, state, or local regulations or statutes.

Advisory T302.1 Condition 3. Compliance would require construction methods or materials that are prohibited by Federal, State, or local regulations or statutes. Restrictions to protect or address environmental concerns imposed by Federal statutes such as the Wilderness Act, Endangered Species Act, and State and local statutes may permit exceptions to the technical provisions in Chapter T3. For example, Federally designated and some State designated Wilderness Areas prohibit the use of mechanized equipment, limiting construction methods to hand tools. In other areas, imported materials may be prohibited to maintain the integrity of the natural ecosystem. This condition is not intended to automatically exempt organizations restricted under regulations or statutes from the technical provisions in Chapter T3.

Many aquatic features protected under Federal or State laws have limited allowable construction practices. For example, a constructed water crossing required under the technical provisions might not be permitted under certain laws or regulations. Construction methods and materials employed in designated wetlands or coastal areas are also strictly limited.

"Local regulations and statutes" address conditions where "conservation easement" or "development rights" programs prohibit or restrict construction methods and practices. For example, where land is purchased from farms, certain use restrictions may prohibit the importation of surfacing materials. On the other hand, local regulations or statutes may not be developed or initiated with the sole purpose of prohibiting use by people with disabilities. For example, initiating a new local regulation that arbitrarily restricts trail width to a dimension that would not allow passage of wheelchairs or other mobility devices is not permitted under this condition.

4. Compliance would not be feasible due to terrain or the prevailing construction practices.

Advisory T302.1 Condition 4. Compliance would not be feasible due to terrain or the prevailing construction practices. The term "not feasible" is used in this condition to specify what is "reasonably do-able." It does not refer to the technical feasibility of complying with the technical provisions. For example, providing a trail with a 1:20 slope or less up a 1,500 foot tall mountain using heavy construction equipment may be feasible, but the trail would be at least 5.8 miles long (rather than 2 miles long under a traditional back-country layout), and may cause inappropriate environmental and visual impacts. The intent of this condition is to recognize that the effort and resources required to comply would be disproportionately high in relation to the level of access created. Although technically feasible, the effort and resources required are not "reasonable."

For example, complying with the technical provisions for running slope (T303.8.2) in areas of steep terrain may require extensive cuts or fills that would be difficult to construct and maintain, or cause drainage and erosion problems. Also, in order to construct a trail on some steep slopes, the trail may become significantly longer causing a much greater impact on the environment. Certain soils are highly susceptible to erosion. Another example might be in areas where soils expand and dramatically contract with water content. If compliance requires techniques that conflict with the natural drainage or existing soil, the trail would be difficult, if not impossible, to maintain.

This condition may also apply where construction methods for particularly difficult terrain or an obstacle would require the use of equipment other than that otherwise used throughout the length of the trail (i.e., techniques different from prevailing construction practices). One example is requiring the use of a bulldozer to remove a rock outcropping when hand tools are the commonly used method of construction for that trail.

Another example might be where compliance with the provision for a firm and stable surface (T303.3) conflicts with the prevailing construction practices by requiring the importation of a new surfacing material that would not otherwise have been used. If the prevailing construction practices would not include the importation of a new surface material and the natural surface material could not be made firm and stable, the trail would not be required to comply with that specific provision.

Trail construction practices vary greatly, from the use of volunteer labor and hand tools, to professional construction with heavy mechanized equipment. For alterations to an existing trail, the "prevailing construction practices" are the methods typically used for construction or maintenance of the trail. The available resources and the environmental conditions (e.g., soil type and depth, vegetation, natural slope) primarily determine the "choice" of construction practices (e.g., machinery, skilled operators, finances). The intent of this condition is to ensure that compliance with the technical provisions does not require the use of construction practices that are beyond the skills and resources of the trail building organization. It is not intended to automatically exempt an organization from the technical provisions simply because of a particular construction practice (e.g., the use of hand tools), or to suggest that hand tools can be selected as the tool of choice to avoid compliance when more expedient methods and resources are available.

T303 Trails

T303.1 General. Trails shall comply with T303.

T303.2 General Exception. Where applying the specific exceptions to the technical provisions in T303 results in any of the conditions in T303.2, the trail shall not be required to comply with T303 beyond the first point where the specific exceptions apply. The segment of the trail between the trailhead and the first point where the specific exceptions apply shall comply with T303 unless the trail segment is 500 feet (150 m) or less in length. Where there is a prominent feature less than 500 feet (150 m) from the trailhead, the trail segment between the trailhead and the prominent feature shall comply with T303.

Conditions 1. The combination of running slope and cross slope exceeds 40 percent for over 20 feet (6100 mm).

2. A trail obstacle 30 inches (760 mm) high or more runs across the full tread width of the trail.

3. The trail surface is neither firm nor stable for a distance of 45 feet (14 m) or more.

4. The tread width is less than 12 inches (305 mm) wide for a distance of 20 feet (6100 mm) or more.

5. The trail is not required to comply with any of the technical provisions in T303 for more than 15 percent of the length of the trail.

T303.3 Surface. The trail surface shall be firm and stable.

EXCEPTION: Where a firm and stable surface cannot be provided because any of the conditions in T302 applies, the surface shall not be required to comply with T303.3.

Advisory T303.3 Surface. Trail surfaces are required to be firm and stable. There is a spectrum of surfaces considered firm and stable and appropriate surfaces are not limited to surfacing materials such as asphalt and concrete. Many naturally occurring surfaces, such as crushed aggregate or soils containing some clay and a spectrum of sieve sizes, are considered firm and stable. Other natural surfaces may also become firm and stable when combined with a stabilizing agent. Wood planks, stone, grass, and packed dirt may also be considered firm and stable. The degree of firmness and stability may vary depending on the intended use and the expected direction and length of travel.

Preliminary information obtained through a small research project on accessible exterior surfaces conducted for the Access Board suggests that surfaces considered “firm” (i.e., does not give way significantly under foot) can range from very firm to moderately firm (defined in table A.) Similarly, surfaces considered stable (i.e., do not shift from side-to-side or when turning) can range from very stable to moderately stable.

The degree of firmness and stability desired or most appropriate is related to the intended use of the trail, the predominant direction of travel, and the overall length of the trail. For example, a surface which is both very firm and very stable, is recommended for trails of more than .5 mile in length due to the duration of travel for a person with a disability. However, it may be acceptable for the surface to be moderately firm (rather than very firm) (using calculations and classifications in Table A below) for trails less than .5 mile but greater than .1 mile in length, and where the travel pattern is primarily linear. It may also be

acceptable for the surface to be both moderately firm and moderately stable for trails less than .1 mile in length, and where the trail is moderately level (< 3% slope).

Table A Calculation and Classification

Firmness Classification	Amount of Penetration
Very Firm	0.3 inches or less
Moderately Firm	Greater than 0.3 inches and less than 0.5 inches
Not Firm	Greater than 0.5 inches
Stability Classification	**Amount of Penetration**
Very Stable	0.5 inches or less
Moderately Stable	Greater than 0.5 inches and less than 1.0 inch
Not Stable	Greater than 1.0 inch

Surfaces that are moderately firm or stable may be appropriate in areas where a cushioned surface is preferred (e.g., for a multi use trail that includes equestrians). Surfaces that are moderately firm and stable may also be appropriate on trails for winter use only because most trail surfaces are very firm and stable when frozen. Surfaces with a high degree of firmness and stability are critical for long distance trails so users may expend a minimum amount of energy over a given distance. A high degree of stability would be desirable for areas with multi-directional traffic.

The following test methodology is based on a preliminary test procedure for the measurement of surface firmness and stability which is one of the ways that firmness and stability can be measured. For more information, consult the “Accessible Exterior Surfaces Technical Report” available through the Access Board. (www.access-board.gov)

The recommended test equipment for determining firmness and stability on outdoor surfaces is the rotational penetrometer, a device consisting of three main components: penetrator, frame, and reference base. The penetrator consists of an 8 by 1 ¼ inch (20 cm by 3 cm) pneumatic caster and a means to press the caster into the surface with a known force. The frame is an attachment to the reference base that provides a means for allowing the penetrator to move freely, perpendicular to the reference base. The reference base is a flat, rigid, surface used to position and anchor the testing equipment relative to the test surface. It has an area through which the penetrator can pass and rotate freely without hindering the movement of the surface material being tested or interfering with the test results. The reference base may also provide a platform for the device operator during testing. The rotational penetrometer is instrumented with a method to measure the amount of vertical displacement of the penetrator into the test surface.

To test surface firmness and stability, the rotational penetrometer is placed on the surface to be tested. A person stands on the reference base of the rotational penetrometer to stabilize its position during testing. The penetrator is lowered onto the test surface and an initial vertical displacement measurement is taken. A load of 44 ± 1 pound (20 ± 0.5 kg) is applied to the penetrator and then a second measurement of the amount of vertical displacement is completed. Then, with the load still applied, the penetrator caster is rotated through four 90 degree rotations about an axis perpendicular to the surface, alternating the direction of rotation (clockwise, counter-clockwise) after each 90 degree rotation. The final amount of vertical displacement is then measured. This test procedure is repeated on the same surface in a different test area until a total of five trials have been completed.

T303.4 Clear Tread Width. The clear tread width of trails shall be 36 inches (915 mm) minimum.

EXCEPTIONS: 1. Where 36 inches (915 mm) minimum clear tread width cannot be provided because any of the conditions in T302 applies, the clear tread width shall be permitted to be reduced to no less than 32 inches (815 mm) minimum.

2. Where 32 inches (815 mm) minimum clear tread width cannot be provided because any of the conditions in T302 applies, the clear tread width shall not be required to comply with T303.4.

Advisory T303.4 Clear Tread Width. The clear tread width of the trail is the width of the usable trail tread. It should be measured perpendicular to the direction of travel and on or parallel to the surface of the usable trail tread. The clear tread width should be measured at intervals no greater than 100 feet (30.5 m).

The minimum clear width of the trail is the width of the usable trail where obstructions restrict the clear tread width and where there is no alternate route to bypass the narrow area. The minimum clear width should be measured at the narrowest point on the trail or trail segment, perpendicular to the direction of travel and on or parallel to the surface of the usable trail tread.

T303.5 Openings. Openings in trail surfaces shall be of a size that does not permit passage of a ½ inch (13 mm) diameter sphere. Elongated openings shall be placed so that the long dimension is perpendicular or diagonal to the dominant direction of travel.

EXCEPTIONS: 1. Elongated openings shall be permitted to be parallel to the dominant direction of travel provided the opening does not permit passage of a ¼ inch (6.5 mm) diameter sphere.

2. Where openings that do not permit passage of a ½ inch (13 mm) diameter sphere cannot be provided because any of the conditions in T302 applies, openings shall be permitted to be of a size that does not permit passage of a ¾ inch (19 mm) diameter sphere.

3. Where openings that do not permit passage of a ¾ inch (19 mm) diameter sphere cannot be provided because any of the conditions in T302 applies, the openings in trail surfaces shall not be required to comply with T303.5.

T303.6 Tread Obstacles. Where tread obstacles exist on trails, the obstacles shall not exceed 2 inches (50 mm) high maximum.

EXCEPTIONS: 1. Where running and cross slopes are 1:20 or less, tread obstacles shall be permitted to be 3 inches (75 mm) high maximum.

2. Where tread obstacles greater than 3 inches (75 mm) high exist because any of the conditions in T302 applies, the tread obstacles shall not be required to comply with T303.6.

Advisory T303.6 Tread Obstacles. Tread obstacles are natural features, such as roots, rocks, and ruts that cannot be avoided. The trail tread corridor is the area on or above the usable trail tread and below the specified design height for the trail. The dimensions of the tread obstacle within the trail tread corridor are as follows:

Width - the size of the obstacle within the trail tread corridor, measured perpendicular to the direction of travel

Length - the size of the obstacle within the trail tread corridor, measured parallel to the direction of travel

Height - the vertical dimension of the tread obstacle, measured from the trail surface to the top or bottom of the obstacle; and

Remaining clear tread width - the remaining tread corridor that is available to traverse around or past the obstacle, should also be measured perpendicular to the direction of travel.

T303.7 Passing Space. Where the clear tread width of trails is less than 60 inches (1525 mm), passing spaces shall be provided at intervals of 1000 feet (300 m) maximum. Passing spaces shall be either a 60 inches (1525 mm) minimum by 60 inches (1525 mm) minimum space, or an intersection of two walking surfaces which provide a T-shaped space complying with T402.1.2 provided the arms and stem of the T-shaped space extend at least 48 inches (1220 mm) beyond the intersection.

EXCEPTION: Where passing spaces cannot be provided because any of the conditions in T302 applies, passing spaces shall not be required.

Advisory T303.7 Passing Space. Passing spaces are required on trails a minimum of every 1000 feet (305 m). However, if a clear tread width less than 60 inches (1525 mm) occurs in an area where users cannot easily move off the trail tread, such as a boardwalk or other surface that is not at the same level as the surrounding natural ground surface or where noxious plants are adjacent to the trail tread, passing spaces should be provided at more frequent intervals. The provision of more frequent passing spaces should also be considered in areas with steep or difficult terrain or limited sight lines, so that users do not have to back up long distances to reach a passing space. More frequent passing spaces should also be considered on trails with heavier use, especially closer to trailheads and prominent features. If a bridge less than 60 inches (1525 mm) wide is provided, a 60 inches by 60 inches (1525 mm by 1525 mm) minimum passing space should be provided at either end of the bridge. Passing spaces may be located to one side of the trail and co-located with resting intervals.

T303.8 Slopes. Slopes shall comply with T303.8.1 and T303.8.2.

EXCEPTIONS: 1. For open drainage structures, a running slope of 1:7 shall be permitted for 5 feet maximum (1525 mm) with a cross slope of 1:20 maximum. Cross slope shall be permitted to be 1:10 at the bottom of the open drain provided the clear tread width is 42 inches (1065 mm) minimum.

2. Where slopes cannot comply with T303.8 because any of the conditions in T302 applies, the requirements of T303.8 shall not apply.

T303.8.1 Cross Slope. The cross slope shall not exceed 1:20 maximum.

Advisory T303.8.1 Cross Slope. Trail cross slope is the angle of the trail tread perpendicular to the direction of travel (the side to side slope of the trail). The recommended unit of measurement is percent or rise over run (e.g., 2% or 1:50). Cross slope measurements should be determined across a 24 in (610 mm) width, at intervals not exceeding 100 ft (30.5 m) in length, from the trail head to the destination. Cross slope measurements are taken perpendicular to the path of travel over the most level section of tread at each point. Additional information on measuring maximum trail cross slope is provided in Advisory T222.1 Trail Signs.

T303.8.2 Running Slope. The running slope shall comply with one or more of the provisions in T303.8.2. No more than 30 percent of the total trail length shall exceed a running slope of 1:12.

T303.8.2.1 Running slope shall be 1:20 or less for any distance.

T303.8.2.2 Running slope shall be 1:12 maximum for 200 feet (61 m) maximum. Resting intervals complying with T303.9 shall be provided at distances no greater than 200 feet (61 m) apart.

T303.8.2.3 Running slope shall be 1:10 maximum for 30 feet (9150 mm) maximum. Resting intervals complying with T303.9 shall be provided at distances no greater than 30 feet (9150 mm) apart.

T303.8.2.4 Running slope shall be 1:8 maximum for 10 feet (3050 mm) maximum. Resting intervals complying with T303.9 shall be provided at distances no greater than 10 feet (3050 mm) apart.

Advisory T303.8.2 Running Slope. The running slope represents the steepness of individual segments of a trail and should be measured parallel to the direction of travel. The recommended unit of measurement is percent or rise over run (e.g., 2% or 1:50). Uphill and downhill trail segments should be measured separately. The distance measured may be as short as 10 feet (3.1m), but should not exceed 100 feet (30.5m) in length. The running slope should be measured for each consecutive trail segment, from the trail head to the destination.

Uphill trail segments and downhill trail segments should not be located sequentially. A sudden grade change without a transition creates difficulties for wheelchair users. If there is no transition, there may be insufficient ground clearance. Then the footrests or anti-tip wheels may get caught on the surface. A sudden grade change without enough of a transition may cause a rapid weight transfer, causing an individual using a wheelchair to lose dynamic stability. Therefore, uphill and downhill trail segments should be separated by a relatively level transition segment with a slope no greater than 1:20.

Handrails are not required on trails, even where a maximum running slope occurs. To counterbalance the lack of handrails, the length of steep trail segments permitted is limited and resting intervals are required. Where handrails are provided on a trail, they should comply with the ABA Accessibility Guidelines.

It is recommended that the use of steps as an alternative route (i.e., in addition to the trail tread surface) be considered for areas where the running slope exceeds 10 percent, significant changes in elevation are required over a short distance, or significant changes in elevation occur repeatedly along a trail. Providing steps will improve trail conditions for ambulatory people with disabilities, such as those who use crutches or walkers and those with heart or respiratory conditions.

Slope represents the proportion of vertical rise to horizontal length and can be represented as a ratio, percentage, pitch or in degrees.

Rise:Length	Percent	Pitch	Degree
1:8	12.50	0.1250	7.13
1:10	10.00	0.1000	5.71
1:12	8.33	0.0833	4.76
1:13	7.69	0.0769	4.40
1:14	7.14	0.0714	4.09
1:15	6.67	0.0667	3.81
1:16	6.25	0.0625	3.58
1:17	5.88	0.0588	3.37
1:18	5.55	0.0555	3.18
1:19	5.26	0.0526	3.01
1:20	5.00	0.0500	2.86
1:50	2.00	0.0200	1.15

T303.9 Resting Intervals. Resting intervals shall be 60 inches (1525 mm) long minimum, shall be at least as wide as the widest portion of the trail segment leading to the resting interval, and shall have a slope not exceeding 1:20 in all directions.

EXCEPTION: Where resting intervals cannot be provided because any of the conditions in T302 applies, resting intervals shall not be required.

Advisory T303.9 Resting Intervals. Resting intervals should be provided between uphill and downhill trail segments if the running slope for either segment exceeds 1:12, as well as at intervals on a continuous slope as specified by T303.8.2. Resting intervals should be positioned so that a smooth, gradual transition is provided between running slope segments. Resting intervals may be located within the trail tread. However, locating the resting interval outside of the main path of travel will ensure that users who are resting are not at risk of collisions with other trail users. More frequent resting intervals should be considered on trails with heavier use, and especially close to trailheads and prominent features. Resting intervals may be located to one side of the trail, or co-located with passing spaces.

T303.10 Edge Protection. Where edge protection is provided, the edge protection shall be 3 inches (75 mm) high minimum.

Advisory T303.10 Edge Protection. If edge protection is provided, a 3 inch (75 mm) minimum height is required. The higher edge protection is required because trail surfaces are likely to have natural variations in the height of the surface. As a result, people with limited vision using navigation canes may search or scan at a higher level in natural outdoor environments than they would in an indoor environment. The higher edge protection will assist in its detection and identification and help to distinguish it from variations in the natural surface of the outdoor environment.

Regardless of the orientation or design of the edge protection, the height of edge protection provided on a trail should be measured in the vertical dimension to the highest point on the edge protection. Where edge protection is provided, small openings may be placed at the base of the edge protection close to the trail surface to allow water to drain off the trail. Care should be taken to clear debris that may build up along the edge protection.

T304 Outdoor Recreation Access Routes

T304.1 General. Outdoor recreation access routes shall comply with T304.

T304.2 Surface. The surface of outdoor recreation access routes shall be firm and stable.

Advisory T304.2 Surface. The degree of firmness and stability desired or most appropriate is related to the intended use of an outdoor recreation access route, the predominant direction of travel and the overall length of the outdoor recreation access route. For example, a surface which is both very firm and very stable, is recommended for outdoor recreation access routes of more than .5 mile in length due to the duration of travel for a person with a disability. However, it may be acceptable for the surface to be moderately firm (rather than very firm) (using calculations and classifications in the advisory for T303.3, Table A) for outdoor recreation access routes less than .5 but greater than .1 mile in length, and where the travel pattern is primarily linear. It may also be acceptable for the surface to be both moderately firm and moderately stable for outdoor recreation access routes less than .1 miles in length, and where the outdoor recreation access route is moderately level (<3% slope). See advisory for T303.3 for test methods related to firmness and stability.

T304.3 Clear Tread Width. The clear tread width of outdoor recreation access routes shall be 36 inches (915 mm) minimum.

EXCEPTION: Where 36 inches (815 mm) minimum clear tread width cannot be provided because any of the conditions in T302 applies, the clear tread width shall be permitted to be reduced to no less than 32 inches (815 mm) minimum for a distance of 24 inches (610 mm) maximum.

T304.4 Openings. Openings in the surfaces of outdoor recreation access routes shall be of a size that does not permit passage of a 1/2 inch (13 mm) diameter sphere. Elongated openings shall be placed so that the long dimension is perpendicular or diagonal to the dominant direction of travel.

EXCEPTION: Elongated openings shall be permitted to be parallel to the dominant direction of travel provided the opening does not permit passage of a 1/4 inch (6.5 mm) diameter sphere.

T304.5 Tread Obstacles. Where tread obstacles exist on outdoor recreation access routes, the obstacles shall not exceed 1 inch (25 mm) high maximum.

EXCEPTION: Where tread obstacles greater than 1 inch (25 mm) high exist because any of the conditions in T302 applies, tread obstacles shall be permitted to be 2 inches (50 mm) high maximum provided they are beveled with a slope no greater than 1:2.

Advisory T304.5 Tread Obstacles. Beveling is only recommended where prevailing construction practices permit the use of hardened surfaces. Beveling with dirt or other natural surfaces is generally not effective because the beveled surface will quickly erode. For example, if a root or rock is not beveled with concrete or a similar imported surface, the dirt will quickly erode and the benefit of the beveling will be lost. Tread obstacles should be avoided as much as possible, because they may pose a tripping hazard.

T304.6 Passing Space. Where the clear tread width of outdoor recreation access routes is less than 60 inches (1525 mm), passing spaces shall be provided at intervals of 200 feet (61 m) maximum. Passing spaces shall be either a 60 inches (1525 mm) minimum by 60 inches (1525 mm) minimum space, or an intersection of two walking surfaces which provide a T-shaped space complying with T402.1.2 provided the arms and stem of the T-shaped space extend at least 48 inches (1220 mm) beyond the intersection.

EXCEPTION: Where passing spaces cannot be provided at intervals of 200 feet (61 m) maximum because any of the conditions in T302 applies, passing spaces shall be permitted at intervals of 300 feet (91 m) maximum.

Advisory T304.6 Passing Space. An outdoor recreation access route less than 60 inches (1525 mm) wide may need more frequent passing spaces depending on use, or if the surface is constructed on a boardwalk or other surface that is at the same level as the surrounding ground surface. More frequent passing spaces may be needed on heavily used outdoor recreation access routes, especially close to higher use elements. Passing spaces may be located to one side of the trail, or co-located with resting intervals.

T304.7 Slopes. Slopes shall comply with T304.7.1 and T304.7.2.

T304.7.1 Cross Slope. The cross slope shall not exceed 1:33 maximum.

EXCEPTION: Where required for proper drainage, cross slopes not exceeding 1:20 maximum shall be permitted.

Advisory T304.7.1 Cross Slope. Cross slope on an outdoor recreation access route is defined as the angle of the route tread perpendicular to the direction of travel (the side-to-side slope of the route). The recommended unit of measurement is percent or rise over run (e.g., 2% or 1:50). Cross slope measurements should be determined across the most level 24 inch (610 mm) width of the trail. Cross slope measurements should be taken perpendicular to the path of travel at intervals not exceeding 100 feet (30.5 m) in length.

Maximum cross slopes for outdoor recreation access routes represent the sections of the route with the greatest angle of the route tread. Maximum cross slopes should be determined over the most level path of travel along the route.

T304.7.2 Running Slope. The running slope shall comply with one or more of the provisions of T304.7.2.

T304.7.2.1 Running slope shall be 1:20 or less for any distance.

T304.7.2.2 Running slope shall be 1:12 maximum for 50 feet (15 m) maximum. Resting intervals complying with T304.8 shall be provided at distances no greater than 50 feet (15 m) apart.

T304.7.2.3 Running slope shall be 1:10 maximum for 30 feet (9150 mm) maximum. Resting intervals complying with T304.8 shall be provided at distances no greater than 30 feet (9 m) apart.

Advisory T304.7.2 Running Slope. The running slope of an outdoor recreation access route represents the steepness of individual segments of the route and should be measured parallel to the direction of travel. The recommended unit of measurement is percent or rise over run (e.g., 2% or 1:50). The distance measured should not exceed 100 feet (30.5 m) in length. The running slope should be measured for each sequential route segment.

Maximum running slope of an outdoor recreation access route represents the steepest sections of the route. The maximum running slope is measured over a 24 inch (610 mm) distance parallel to the path of travel.

Outdoor recreation access routes are not required to have handrails, even where a maximum running slope occurs. To counterbalance the lack of handrails, the provision for running slope limits the length of steep segments and requires resting intervals. Where handrails are provided, they should comply with the revised ABA Accessibility Guidelines. Uphill segments and downhill segments should not be located sequentially. A sudden grade change without a transition creates difficulties for wheelchair users. If there is no transition, there may be insufficient ground clearance and the footrests or anti-tip wheels may get caught on the surface. A sudden grade change without enough of a transition may cause a rapid weight transfer, causing an individual using a wheelchair to lose dynamic stability. Therefore, uphill and downhill segments should be separated by a relatively level transition segment with a slope no greater than 1:20.

T304.8 Resting Intervals. Resting intervals shall be 60 inches (1525 mm) long minimum, shall be at least as wide as the widest portion of the segment leading to the resting interval, and have a slope not exceeding 1:33 in all directions.

EXCEPTION: Where required for proper drainage, cross slopes not exceeding 1:20 maximum shall be permitted.

Advisory T304.8 Resting Intervals. More frequent resting intervals may be needed on heavily used outdoor recreation access routes, especially close to higher use elements. Resting intervals should be located to one side of the outdoor recreation access route, or co-located with passing spaces.

T304.9 Edge Protection. Where edge protection is provided, the edge protection shall be 3 inches (75 mm) high minimum.

Advisory T304.9 Edge Protection. Where edge protection is provided, small openings may be placed at the base of the edge protection close to the surface of the outdoor recreation access route to allow water to drain off the surface. Care should be taken to clear debris that may build up along the edge protection.

T305 Beach Access Routes

T305.1 General. Beach access routes shall comply with T305.

T305.2 Surface. The surface of beach access routes shall be firm and stable.

Advisory T305.2 Surface. The degree of firmness and stability desired or most appropriate is related to the intended use of the beach access route, the predominant direction of travel, and the overall length of the beach access route. For example, a surface which is both very firm and very stable (using calculations and classifications in Table A in the advisory for T303.3) is recommended for beach access routes of more than .5 mile in length due to the duration of travel for a person with a disability. However, it may be acceptable for the surface to be moderately firm (rather than very firm) for beach access routes less than .5 but greater than .1 mile in length, and where the travel pattern is primarily linear. It may also be acceptable for the surface to be both moderately firm and moderately stable for beach access routes less than .1 mile in length, and where the beach access route is moderately level (<3% slope). See advisory for T303.3 for test methods related to firmness and stability.

T305.3 Location. The beach access route shall extend to the high tide level, mean river bed level, or the normal recreation water level.

T305.4 Clear Width. The clear width of beach access routes shall be 36 inches (915 mm) minimum.

T305.5 Openings. Openings in the surfaces of beach access routes shall be of a size that does not permit passage of a ½ inch (13 mm) diameter sphere. Elongated openings shall be placed so that the long dimension is perpendicular or diagonal to the dominant direction of travel.

EXCEPTION: Elongated openings shall be permitted to be parallel to the dominate direction of travel provided the opening does not permit passage of ¼ inch (6.5 mm) sphere.

T305.6 Obstacles. Obstacles on beach access routes shall not exceed 1 inch (25 mm) high maximum.

T305.7 Passing Space. Where the clear width of beach access routes is less than 60 inches (1525 mm), passing spaces shall be provided at intervals of 200 feet (61 m) maximum. Passing spaces shall be either a 60 inches (1525 mm) minimum by 60 inches (1525 mm) minimum space, or an intersection of two walking surfaces which provide a T-shaped space complying with T402.1.2 provided the arms and stem of the T-shaped space extend at least 48 inches (1220 mm) beyond the intersection.

T305.8 Turning Space. Turning space shall be provided at the high tide level, mean river bed level, normal recreation water level, or end of the beach access route. Turning space shall not overlap with the beach access route and shall be either a 60 inches (1525 mm) minimum by 60 inches (1525 mm) minimum space, or an intersection of two walking surfaces which provides a T-shaped space complying with T402.1.2 provided that the arms and stem of the T-shaped space extend at least 48 inches (1220 mm) beyond the intersection.

T305.9 Slopes. Slopes shall comply with T305.9.1 and T305.9.2.

T305.9.1 Cross Slope. The cross slope shall not exceed 1:33 maximum.

EXCEPTION: Where required for proper drainage, cross slopes not exceeding 1:20 maximum shall be permitted.

T305.9.2 Running Slope. The running slope shall comply with one or more of the provisions in T305.9.2.

T305.9.2.1 Running slope shall be 1:20 or less for any distance.

T305.9.2.2 Running slope shall be 1:12 maximum for 50 feet (15 m) maximum. Resting intervals complying with T304.8 shall be provided at distances no greater than 50 feet (15 m) apart.

T305.9.2.3 Running slope shall be 1:10 maximum for 30 feet (9 m) maximum. Resting intervals complying with T304.8 shall be provided at distances no greater than 30 feet (9 m) apart.

T305.10 Edge Protection. If the drop-off from the beach access route to the beach is 6 inches (150 mm) or higher, the beach access route shall have curbs, walls, railings, or projecting surfaces that prevent people from falling off the route. Edge protection shall be 2 inches (50 mm) high minimum. If the drop-off is greater than 1 inch (25 mm), but less than 6 inches (150 mm), then the edge must be beveled.

T306 Picnic Tables

T306.1 General. Picnic tables shall comply with T306.

> **Advisory T306.1 Picnic Tables.** This provision applies only to picnic tables that are “fixed” to the ground and includes picnic tables attached to the ground by a chain from the table to a concrete footing below ground.

T306.2 Wheelchair Spaces. Wheelchair spaces shall comply with T306.4 and T403. Wheelchair spaces shall provide knee space at least 27 inches (685 mm) high, 30 inches (760 mm) wide, and 19 inches (485 mm) deep. Toe clearance 9 inches (230 mm) high minimum shall extend an additional 5 inches (127 mm) minimum from the knee clearance.

> **Advisory T306.2 Wheelchair Spaces.** The location of the wheelchair space has not been specified in this provision. Where multiple tables are provided, it is recommended that a variety of space placements be included to provide users with a choice such as locating the space in the center of the seating area of the table or at the ends of the tables.

T306.3 Table Clearance. A 36 inches (915 mm) minimum clear space complying with T306.4 shall be provided around the usable portion of the table, measured from the back edge of the seat.

T306.4 Clear Spaces. Clear spaces shall comply with T306.4.

T306.4.1 Surface. The surface of clear spaces shall be firm and stable.
EXCEPTION: Where a firm and stable surface cannot be provided because any of the conditions in T302 applies, the surface of the clear space shall not be required to comply with T306.4.1.

T306.4.2 Slope. The slope of clear spaces shall not exceed 1:50 in all directions.

EXCEPTIONS: 1. Where required for proper drainage, slopes not exceeding 1:33 maximum shall be permitted.

2. Where slopes not exceeding 1:33 maximum cannot be provided because any of the conditions in T302 applies, the slope of the clear space shall not be required to comply with T306.4.2.

Advisory T306.4 Clear Spaces. Ground surfaces in outdoor areas that are level (less than 3% slope in any direction to allow drainage) and where the distances traveled are less than 50 feet (e.g., around a picnic table) should be at least moderately firm and moderately stable (see Table A in section T303.3 and for more information related to test methods for surface firmness and stability).

T307 Fire Rings

T307.1 General. Fire rings shall comply with T307.

T307.2 Clear Space. All usable portions of the fire ring shall be provided with a clear space complying with T306.4 that is 48 inches (1220 mm) deep minimum measured from the fire ring and 48 inches (1220 mm) wide minimum.

EXCEPTION: Where a clear space 48 inches (1220 mm) deep minimum cannot be provided because any of the conditions in T302 applies, the space shall be permitted to be reduced by the minimum necessary but shall not be less than 36 inches (815 mm) deep minimum.

T307.3 Fire Surface Height. The fire building surface shall be 9 inches (230 mm) minimum above the ground or floor surface.

T307.4 Raised Edge. Where a raised edge or curb is provided on a fire ring, the combined distance over the edge or curb down to the fire building surface shall be 24 inches (610 mm) maximum.

T308 Cooking Surfaces, Grills, and Pedestal Grills

T308.1 General. Cooking surfaces, grills, and pedestal grills shall comply with T308.

T308.2 Clear Space. All usable portions of the cooking surface shall be provided with a clear space complying with T306.4 that is 48 inches (1220 mm) deep minimum measured from the cooking surface and 48 inches (1220 mm) wide minimum.

EXCEPTION: Where a clear space 48 inches (1220 mm) deep minimum cannot be provided because any of the conditions in T302 applies, the space shall be permitted to be reduced by the minimum necessary but shall not be less than 36 inches (815 mm) deep minimum.

T308.3 Cooking Surface Height. The cooking surface shall be 15 inches (380 mm) minimum and 34 inches (865 mm) maximum above the ground or floor surface.

T308.4 Operable Parts. Operable parts shall comply with T407.

T309 Trash and Recycling Containers

T309.1 General. Trash and recycling containers shall comply with T309.

T309.2 Clear Space. A clear space complying with T306.4 and T403 shall be provided at trash and recycling containers.

T309.3 Operable Parts. Operable parts shall comply with T407.

EXCEPTION: Hinged lids and controls designed for large animal exclusion shall not be required to comply with T407.3.

> **Advisory T309.3 Operable Parts.** The USDA Forest Service, Technology and Development Center has issued a document which provides information about animal resistant garbage containers. Suggested designs may be useful in complying with these provisions.

T310 Wood Stoves and Fireplaces

T310.1 General. Wood stoves and fireplaces shall comply with T310.

T310.2 Clear Space. All usable portions of the wood stove or fireplace shall be provided with a clear space complying with T306.4 that is 48 inches (1220 mm) deep minimum measured from the wood stove or fireplace and 48 inches (1220 mm) wide minimum.

EXCEPTION: Where a clear space 48 inches (1220 mm) deep minimum cannot be provided because any of the conditions in T302 applies, the space shall be permitted to be reduced by the minimum necessary but shall not be less than 36 inches (815 mm) deep minimum.

T310.3 Operable Parts. Operable parts shall comply with T407.

T311 Overlooks and Viewing Areas

T311.1 General. Overlooks and viewing areas shall comply with T311.

T311.2 Turning Space. The viewing area shall have a turning space complying with T306.4 and T402.

EXCEPTION: Where turning spaces cannot be provided because any of the conditions in T302 applies, turning spaces shall not be required.

> **Advisory T311.2 Turning Space.** Ground surfaces in outdoor areas that are level (less than 3% slope in any direction to allow drainage) and where the distances traveled are less than 50 feet (e.g., around a picnic table) should be at least moderately firm and moderately stable (see Table A in section T303.3 and for more information related to test methods for surface firmness and stability).

T311.3 Unrestricted Viewing Opportunities. Each location providing viewing opportunities for distinct points of interest shall provide at least one unrestricted viewing opportunity for each distinct point of

interest that accommodates eye levels between 32 inches (815 mm) minimum and 51 inches (1295 mm) maximum.

EXCEPTION: Where unrestricted viewing opportunities cannot be provided because any of the conditions in T302 applies, unrestricted viewing opportunities shall not be required.

Advisory T311.3 Unrestricted Viewing Opportunities. Overlooks and viewing areas are specifically designed and constructed to provide an observation of a vista or to a specific point of interest, such as the view to a mountain range or down into a valley or to a waterfall or geologic formation. Each location that provides a viewing opportunity to one or more distinct points of interest must have at least one unrestricted viewing area for each viewing opportunity. Safety barriers, guardrails, and walls used to protect the visitor from an edge or drop off, may not restrict this viewing opportunity. Designs including see-through panels in walls, screened openings or elevated platforms away from the guarded edge will provide an individual seated in a wheelchair or other mobility device with the same view.

T312 Telescopes and Periscopes

T312.1 General. Telescopes and periscopes shall comply with T312.

T312.2 Clear Space. A clear space complying with T403 shall be provided at telescopes and periscopes. Clear spaces shall have a firm and stable surface, and shall have a 1:50 maximum slope in all directions.

EXCEPTION: Where required for proper drainage, slopes not exceeding 1:33 maximum shall be permitted.

Advisory T312.2 Clear Space. Ground surfaces in outdoor areas that are level (less than 3% slope in any direction to allow drainage) and where the distances traveled are less than 50 feet (e.g., around a picnic table) should be at least moderately firm and moderately stable (see Table A in section T303.3 and for more information related to test methods for surface firmness and stability).

T312.3 Operable Parts. Operable parts shall comply with T407.

T312.4 Eye Piece. The eye piece shall be usable from the seated position for viewing each point of interest.

Advisory T312.4 Eye Piece. Telescopes and periscopes need to be designed for people of various heights, including children, people seated and those standing. Several options are available at locations where there is only one telescope or periscope, such as providing an adjustable scope, an adjustable seat, or a single base with two viewing scopes located at different heights. Use of a swing away seat or a small step or ring platform attached to the mounting post of the instrument would be useful for persons of short stature or children.

T313 Fixed Benches

T313.1 General. Fixed benches shall comply with T313.

T313.2 Clear Space. At least one clear space complying with T306.4 and T403 shall be provided at one end of the bench and the space shall not overlap the clear space required for other elements. The clear space shall be positioned to allow wheelchair users to be seated shoulder-to-shoulder with an individual seated on the bench.

T313.3 Height. The top of the seat surface shall be 17 inches (430 mm) minimum and 19 inches (485 mm) maximum above the ground or floor space.

T313.4 Back Support. Back support shall be provided the full length of the bench.

T313.5 Armrest. Where required by T213.2, at least one armrest shall be provided on the bench and shall comply with T411.8.

T314 Utility Sinks

T314.1 General. Utility sinks shall comply with T314.

T314.2 Clear Space. Clear space complying with T403 shall be provided at utility sinks. The clear space shall be positioned for a parallel approach. Clear spaces shall have a firm and stable surface, and shall have a 1:50 maximum slope in all directions.

> **EXCEPTION:** Where required for proper drainage, slopes not exceeding 1:33 maximum shall be permitted.

T314.3 Height. The counter or rim shall be 34 inches (865 mm) maximum above the ground or floor surface.

T314.4 Depth. The bottom of the bowl shall be 15 inches (380 mm) minimum above the ground or floor surface.

T314.5 Operable Parts. Operable parts shall comply with T407.

T315 Mobility Device Storage Facilities

T315.1 General. Mobility device storage facilities shall comply with T315.

T315.2 Clear Space. Clear space complying with T306.4 and T403 shall be provided at storage facilities.

T315.3 Mobility Device Storage. Storage facilities designed for mobility devices shall be 38 inches (965 mm) high minimum, 28 inches (710 mm) wide minimum and 40 inches (1015 mm) deep minimum.

T315.4 Operable Parts. Operable parts shall comply with T407.

T316 Pit Toilets

T316.1 General. Pit toilets shall comply with T316.

T316.2 Clear Space. Clear space complying with T306.4 and T409 shall be provided at pit toilets.

EXCEPTIONS: 1. Where clear space complying with T409 cannot be provided because any of the conditions in T302 applies, the clear space shall be permitted to be reduced to 48 inches (1220 mm) by 48 inches (1220 mm) minimum.
2. Where a clear space 48 inches (1220 mm) by 48 inches (1220 mm) minimum cannot be provided because of any of the conditions in T302 applies, a clear space shall not be required.

T316.3 Height. The seat height of pit toilets shall comply with T409.4.

T316.4 Grab Bars. Where the pit toilet is provided with walls, grab bars complying with T411 shall be provided.

T317 Utilities

T317.1 General. Utilities shall comply with T317.

T317.2 Clear Space. A 60 inches (1525 mm) minimum by 60 inches (1525 mm) minimum clear space shall be provided at water spouts. A clear space complying with T403 shall be provided at all other utilities. Clear spaces shall have a firm and stable surface, and shall have a 1:50 maximum slope in all directions.
EXCEPTION: Where required for proper drainage, slopes not exceeding 1:33 maximum shall be permitted.

T317.3 Water Spouts. Water spouts shall be located 28 inches (710 mm) minimum to 36 inches (915 mm) maximum above the ground or floor surface and shall be centered in the clear space required by T317.2.

T317.4 Operable Parts. Operable parts shall comply withT407.
EXCEPTIONS: 1. Sewage hookups shall not be required to comply with T407.
2. Hand pumps shall not be required to comply with T407.3.

T318 Camping Facilities

T318.1 General. Camping facilities shall comply with T318.

T318.2 Camping Space Parking. Camping space parking shall comply with T318.2.

T318.2.1 Recreational Camping Vehicle and Trailer Spaces. Recreational camping vehicle and trailer parking spaces shall be 20 feet (6100 mm) wide minimum.
EXCEPTION: Where two recreational camping vehicle or trailer spaces are required by T218.2, one space shall be permitted to be 16 feet (4880 mm) wide minimum.

T318.2.2 Tent Camping Spaces and Camp Shelter Spaces. Where parking is provided within the tent camping spaces or camp shelter spaces, the parking space shall be 16 feet (4880 mm) wide minimum.

T318.2.3 General Use Parking Areas. Recreational camping vehicle and trailer parking spaces in general use parking areas shall be 12 feet (3660mm) wide minimum, and shall have an adjacent

access aisle 8 feet (2440 mm) wide minimum extending the full length of the parking space. The surface of the parking space and access aisle shall be firm and stable.

T318.2.4 Slope. Parking spaces shall have a 1:50 maximum slope in all directions.
EXCEPTION: Where required for proper drainage, slopes not exceeding 1:33 maximum shall be permitted.

T318.3 Tent Pads and Tent Platforms. Tent pads and tent platforms shall comply with T318.3.

T318.3.1 Clear Space. A 48 inches (1220 mm) wide minimum clear space shall be provided around the tent pad or tent platform.
EXCEPTION: Where a 48 inches (1220 mm) minimum wide clear space cannot be provided because any of the conditions in T302 applies, the space shall be permitted to be reduced by the minimum necessary but shall not be less than 36 inches (915 mm) wide minimum.

T318.3.2 Surface. The surface of tent pads and tent platforms, and the clear space required by T318.3.1 shall be firm and stable. Tent pad surfaces shall allow use of tent stakes and other securement devices.
EXCEPTION: Where a firm and stable tent pad surface and clear space cannot be provided because any of the conditions in T302 applies, the surface shall not be required to comply with T318.3.2.

T318.3.3 Slope. Tent pads and tent platforms, and the clear space required by T318.3.1 shall have a 1:50 maximum slope in all directions.
EXCEPTION: Where required for proper drainage, slopes not exceeding 1:33 maximum shall be permitted.

T318.3.4 Edge Protection. Curbs, walls, railing, or projecting surfaces that prevent people from slipping off the tent platform shall be provided. Curbs shall be 3 inches (75 mm) high minimum.

T318.3.5 Connection. The surface of the tent platform shall be accessed by either a ramp, by transfer, or directly from the adjacent ground surface.

T319 Warming Huts

T319.1 General. Warming huts shall provide a turning space complying with T402. Where doors are provided, they shall comply with T408.

T320 Outdoor Rinsing Showers

T320.1 General. Outdoor rinsing showers shall comply with T320.

T320.2 Clear Space. A clear space of 60 inches (1525 mm) diameter minimum shall be provided at outdoor rinsing showers and shall be located so that the water from the shower head is directed toward the center of the clear space. The clear space shall have a firm and stable surface, and shall have a 1:50 maximum slope in all directions.

EXCEPTION: Where required for proper drainage, slopes not exceeding 1:33 maximum shall be permitted.

T320.3 Grab Bars. A grab bar complying with T320.3.1, T320.3.2, or T320.3.3 shall be provided at outdoor rinsing showers. The grab bar shall also comply with T411.

T320.3.1 Vertical Grab Bar. Where the shower head is mounted on a post, a vertical grab bar shall be provided under the shower head and shall start 33 inches (840 mm) maximum above the floor and extend to within at least 3 inches (75 mm) of the shower head.

T320.3.2 Circular Grab Bar. Where the shower head is mounted on a post, a grab bar that surrounds the usable part of the post shall be provided. The grab bar shall be provided 33 inches (840 mm) minimum to 36 inches (915 mm) maximum above the floor.

T320.3.3 Horizontal Grab Bar. A horizontal grab bar extending 18 inches (455 mm) minimum in both directions from the center line of the shower head shall be provided under the shower head. The grab bar shall be provided 33 inches (840 mm) minimum to 36 inches (915 mm) maximum above the floor.

T320.4 Controls. Controls shall comply with T407. If self-closing controls are used, the controls shall remain open for at least 10 seconds.

T320.5 Low Shower Spray Head. A fixed shower spray head shall be provided and shall be located 48 inches (1220 mm) minimum to 54 inches (1370 mm) maximum above the ground or floor.
EXCEPTION: A hand held shower spray unit complying with T410 shall be permitted.

T320.6 High Shower Spray Head. A fixed shower spray head shall be provided and shall be located 72 inches (1830 mm) minimum above the ground or floor.
EXCEPTION: A hand held shower spray unit complying with T410 shall be permitted.

T321 Signs

T321.1 General. Trail signs shall comply with T321.2 and camping space signs shall comply with T321.3.

T321.2 Trail Signs. Signs identifying trails and trail segments complying with T303 shall be placed at the trail head and all designated access points. The signs shall display a symbol designating that the trail or trail segment is accessible, and shall include the total distance of the accessible trail or trail segment and the location of the first point where exceptions from the technical provisions in T303 apply.

Advisory T321.2 Trail Signs. Accessible trails must be identified by a sign. While no specific sign was decided on, possible designs for consideration follow.

Given the wide variability in the actual characteristics that may be encountered on a trail, it is strongly recommended that objective information about the actual trail conditions be provided for all trails, whether or not they are accessible. Objective information about actual trail conditions for all trails will assist users in determining whether the trail meets their own abilities. The variability of conditions on these trails can be very dramatic, and may range from relatively minor variations from the technical provisions to extreme conditions. Objective information about the trail conditions will enhance the accessibility, safety, and satisfaction of all trail users, both with and without disabilities.

Where more extensive trail information is provided (e.g., a top view map of trail and facilities), a profile of the trail grade and surface should be included, identifying the location of the accessible trail segments and any parts of the trail that are not accessible. Recommendations for measurement techniques for the individual trail variables are included at the end of this section. For trails that comply with the technical provisions in T303, it is recommended that the following additional information be provided:

Trail symbol
Running slope (average and maximum)
Cross slope (maximum)
Clear tread width (minimum)
Surface type
Trail length
Trail elevation (at trailhead); and
Maximum elevation attained.

Advisory T321.2 Trail Signs. For trails that do not comply with the technical provisions in T303, it is recommended that the following information be provided:

Running slope (average and maximum)
Cross slope (average and maximum)
Clear tread width (minimum and average)
Surface type, firmness, and stability
Tread obstacles (magnitude and frequency)
Trail length
Trail elevation (at trailhead)
Total elevation change; and
Maximum and lowest elevation attained.

The following definitions describe how measurements should be made in order to provide the recommended information for trail signage:

- Surface Information

The type of material that makes up the majority of the surface should be described (e.g., packed soil, asphalt, crushed rock, or wood). The firmness of the surface should be described as “very firm” or “moderately firm”. The stability of the surface should be described as “very stable” or “moderately stable” (see Table A in Advisory T303.3 Surfaces for information on measuring firmness and stability).

- Clear Tread Width (minimum and average)

Average clear tread width represents the typical clear tread width over the entire length of the trail. Average clear tread width should be determined by averaging the individual clear trail widths for each sequential segment of the trail from the trail head to the destination (see T303.4 for additional information on measuring clear tread width).

- Tread Obstacles

See T303.6 for information on measuring tread obstacles.

- Slope

Average running slope represents the typical steepness of the entire length of the trail. The running slope should be measured for each sequential trail segment, from the trail head to the destination. It is recommended that trail segments be identified in 100 foot (30.5 m) maximum lengths. Calculation of the average running slope should be based on the running slope for each trail segment taking into consideration the interval over which each measurement was made.

Advisory T321.2 Trail Signs. Maximum running slope represents the section(s) of the trail with the steepest grade. Maximum running slope should be determined over the best (i.e., most level) path of travel for that segment of the trail. For example, a 10 foot wide trail may have a steep rut on one edge of the trail because that side of the trail has eroded significantly. The rut is 3 feet wide and continues along the trail for 50 feet. The running slope when one walks down into the rut is 20 percent. The remaining 7 feet on the right-hand side of the trail has a running slope of 10 percent. The maximum running slope would be measured as 10 percent.

- Cross Slope

Average cross slope represents the angle of the tread over the entire length of the trail. The average cross slope should be determined by taking the average of the cross slope measurements taken at intervals of 100 feet (30.5 m) or less from the trailhead to the destination, along the easiest or most level path of travel along the trail. Trail cross slope should be measured over a 24 inch (610 mm) width. Calculation of the average cross slope is the average value of all cross slope measurements taking into consideration the length of the interval between each measurement.

Maximum cross slope should be determined over the best (i.e., most level) path of travel for that segment of the trail. For example, a 6 foot wide trail may have a steep side slope on one edge of the trail. This section has an 8 percent cross slope that extends 2 feet from the edge of the trail tread. The remaining 4 feet on the other side of the trail has a cross slope of 3 percent. The maximum cross slope would be measured as 3 percent.

- Trail Length

The distance from the trailhead to the destination or end of the trail should be measured in linear feet along the center line of the trail.

- Trail Elevation

The elevation should be recorded at the trail head, at the highest point on the trail and at the lowest point on the trail. Total elevation change is the sum of all elevation gains and losses, indicating the total amount of elevation which must be negotiated.

Advisory T321.2 Trail Signs. The following are examples of generic signage formats that include the information recommended in this advisory note.

Happy Falls Trail

Length 2.3 mi **Trailhead Elevation 1100 ft**

Users/Activities

This is one of the most sceinic walks in our park. As you work your way up to the falls, you will be amazed at the spectacular views off the sides of the trail. When you reach the lookout point you will need to take a moment to get a few sanp shots with you and your friend infront of this natural canvas. The Falls star 300 ft. above you and cascade down the cliffs.

The Average Grade of the trail is 6%
6% of the trail is greater than 10%
580 ft are greater than 14%

The Average Cross Slope of the trail is 3%
10% of the trail is greater than 6%
72 ft are greater than 12%

The Average Tread Width of the trail is 69 in
The Minimum Tread Width of the trail is 28 in
The Minimum Clearance Width of the trail is 24 in

The trail surface is Decomp. Granite
75 % of the trail is Firm
351 ft of the trail is Soft

Other Hazards

10 in Dropoff

Poisonous Plants

8 in Roots

Trail Profile

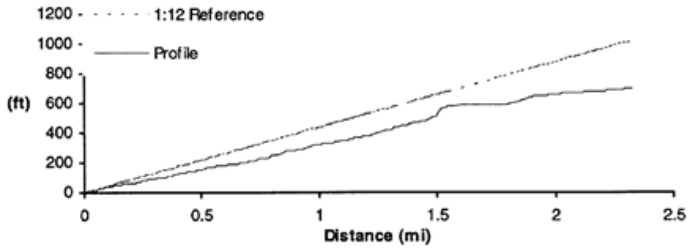

Trailhead Location The trailhead is located off of highway 143, just north of Mono Lake Road. Take highway 143, 7 miles east to Mono Lake Road. Get off on Mono Lake Road north for 2 miles and you'll see the parking lot for the trail on the left side.

Warning: Trail conditions may have changed since this trail was assessed. Temporary obstacles such as fallen trees and land slides were not mapped.

Trail Acccess Information **Abraham Lincoln Birthplace National Historic Site**

This is a sample of trail information that could be distributed at a visitor center or used as trailhead signage.

Advisory T321.2 Trail Signs. This is a sample of full trailhead signage that would be printed in full color and could be placed at the beginning of the trail. It could also be formatted to fit into a fold up pocket guide.

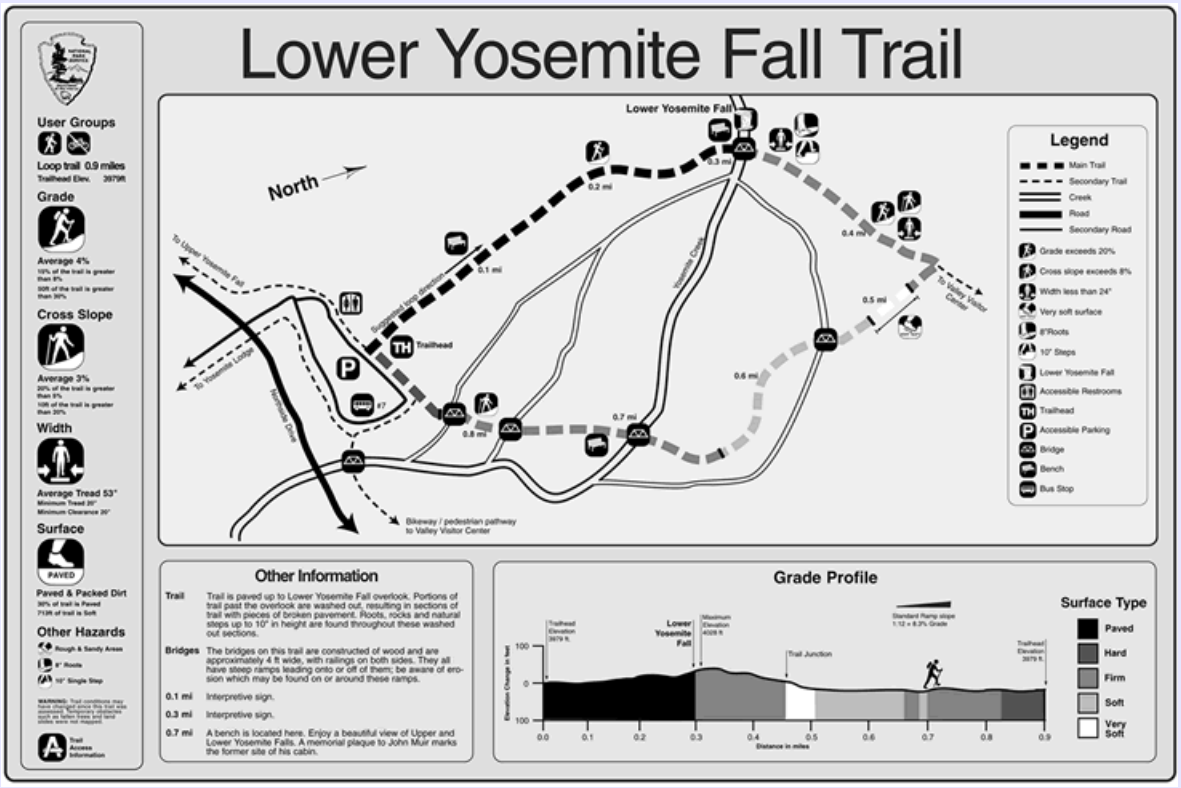

T321.3 Camping Space Signs. Camping spaces complying with T318 shall be identified by the International Symbol of Accessibility complying with T412.

T322 Protruding Objects

T322.1 General. Protruding objects on trails, outdoor recreation access routes, and beach access routes shall comply with T405. Trails shall have 80 inches (2030 mm) high minimum vertical clearance.

EXCEPTION: Where 80 inches (2030 mm) high minimum vertical clearance cannot be provided on trails because any of the conditions in T302 applies, vertical clearance shall be permitted to be less than 80 inches (2030 mm) high minimum where a barrier is provided.

Advisory T322.1 Protruding Objects. When the vertical clearance is less than 80 inches on a trail, a barrier is needed to warn persons who are blind or visually impaired.

CHAPTER T4: SUPPLEMENTARY TECHNICAL PROVISIONS

T401 General

T401.1 Scope. The provisions of Chapter T4 shall apply where required by Chapter T3 or where referenced by a requirement in this document.

T402 Turning Space

T402.1 Size. Turning space shall comply with T402.1.1 or T402.1.2.

T402.1.1 Circular Space. The turning space shall be a space of 60 inches (1525 mm) diameter minimum. The space shall be permitted to include knee and toe clearance complying with T404.2 and T404.3.

T402.1.2 T-Shaped Space. The turning space shall be a T-shaped space within a 60 inch (1525 mm) square minimum with arms and base 36 inches (915 mm) wide minimum. Each arm of the T shall be clear of obstructions 12 inches (305 mm) minimum in each direction and the base shall be clear of obstructions 24 inches (610 mm) minimum. The space shall be permitted to include knee and toe clearance complying with T404.2 and T404.3 only at the end of either the base or one arm.

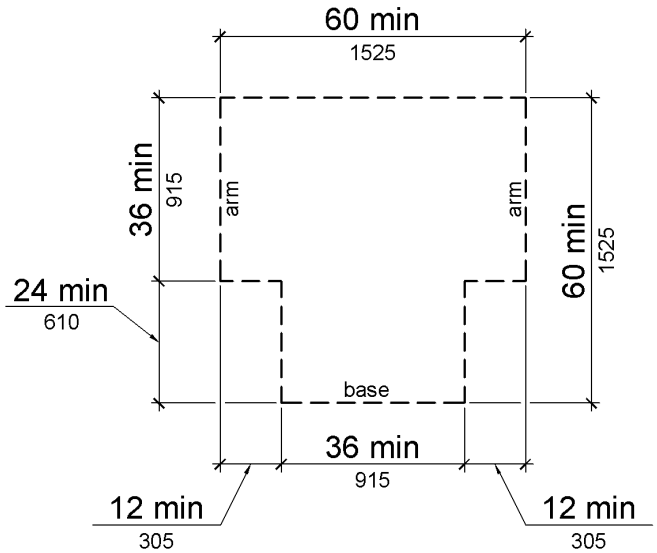

Figure T402.1.2
T-Shaped Turning Space

T402.2 Door Swing. Doors shall be permitted to swing into turning spaces.

T403 Clear Floor or Ground Space

T403.1 Size. The clear floor or ground space shall be 30 inches (760 mm) minimum by 48 inches (1220 mm) minimum.

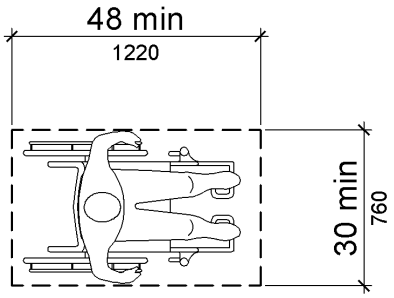

Figure T403.1
Clear Floor or Ground Space

T404 Knee and Toe Clearance

T404.1 General. Where space beneath an element is included as part of clear floor or ground space or turning space, the space shall comply with T404. Additional space shall not be prohibited beneath an element but shall not be considered as part of the clear floor or ground space or turning space.

> **Advisory T404.1 General.** Clearances are measured in relation to the usable clear floor space, not necessarily to the vertical support for an element. When determining clearance under an object for required turning or turning space, care should be taken to ensure the space is clear of any obstructions.

T404.2 Toe Clearance.

T404.2.1 General. Space under an element between the finish floor or ground and 9 inches (230 mm) above the finish floor or ground shall be considered toe clearance and shall comply with T404.2.

T404.2.2 Maximum Depth. Toe clearance shall extend 25 inches (635 mm) maximum under an element.

T404.2.3 Minimum Required Depth. Where toe clearance is required at an element as part of a clear floor space, the toe clearance shall extend 17 inches (430 mm) minimum under the element.

T404.2.4 Additional Clearance. Space extending greater than 6 inches (150 mm) beyond the available knee clearance at 9 inches (230 mm) above the finish floor or ground shall not be considered toe clearance.

T404.2.5 Width. Toe clearance shall be 30 inches (760 mm) wide minimum.

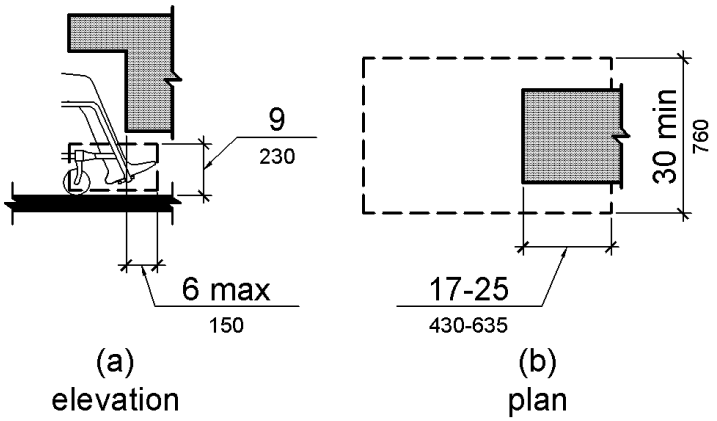

Figure T404.2
Toe Clearance

T404.3 Knee Clearance.

T404.3.1 General. Space under an element between 9 inches (230 mm) and 27 inches (685 mm) above the finish floor or ground shall be considered knee clearance and shall comply with T404.3.

T404.3.2 Maximum Depth. Knee clearance shall extend 25 inches (635 mm) maximum under an element at 9 inches (230 mm) above the finish floor or ground.

T404.3.3 Minimum Required Depth. Where knee clearance is required under an element as part of a clear floor space, the knee clearance shall be 11 inches (280 mm) deep minimum at 9 inches (230 mm) above the finish floor or ground, and 8 inches (205 mm) deep minimum at 27 inches (685 mm) above the finish floor or ground.

T404.3.4 Clearance Reduction. Between 9 inches (230 mm) and 27 inches (685 mm) above the finish floor or ground, the knee clearance shall be permitted to reduce at a rate of 1 inch (25 mm) in depth for each 6 inches (150 mm) in height.

T404.3.5 Width. Knee clearance shall be 30 inches (760 mm) wide minimum.

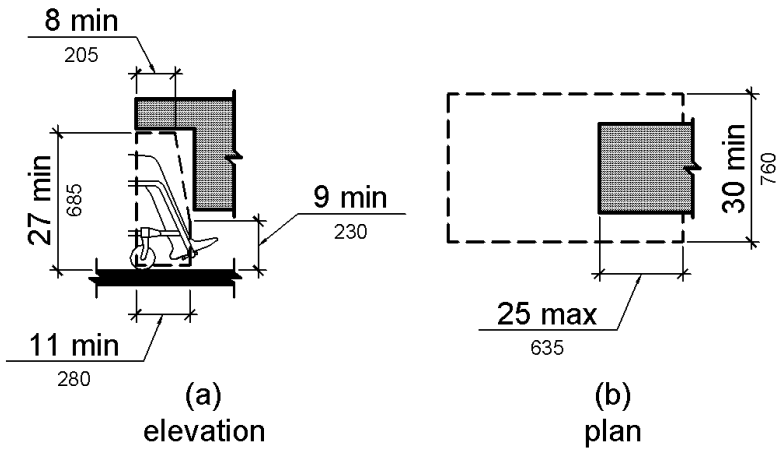

Figure T404.3
Knee Clearance

T405 Protruding Objects

T405.1 General. Protruding objects shall comply with T405.

T405.2 Protrusion Limits. Objects with leading edges more than 27 inches (685 mm) and not more than 80 inches (2030 mm) above the finish floor or ground shall protrude 4 inches (100 mm) maximum horizontally into the circulation path.

EXCEPTION: Handrails shall be permitted to protrude 4 ½ inches (115 mm) maximum.

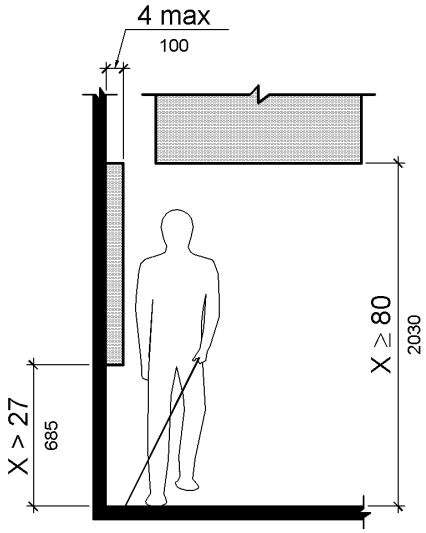

Figure T405.2
Limits of Protruding Objects

T405.3 Post-Mounted Objects. Free-standing objects mounted on posts or pylons shall overhang circulation paths 12 inches (305 mm) maximum when located 27 inches (685 mm) minimum and 80 inches (2030 mm) maximum above the finish floor or ground. Where a sign or other obstruction is mounted between posts or pylons and the clear distance between the posts or pylons is greater than 12 inches (305 mm), the lowest edge of such sign or obstruction shall be 27 inches (685 mm) maximum or 80 inches (2030 mm) minimum above the finish floor or ground.

EXCEPTION: The sloping portions of handrails serving stairs and ramps shall not be required to comply with T405.3.

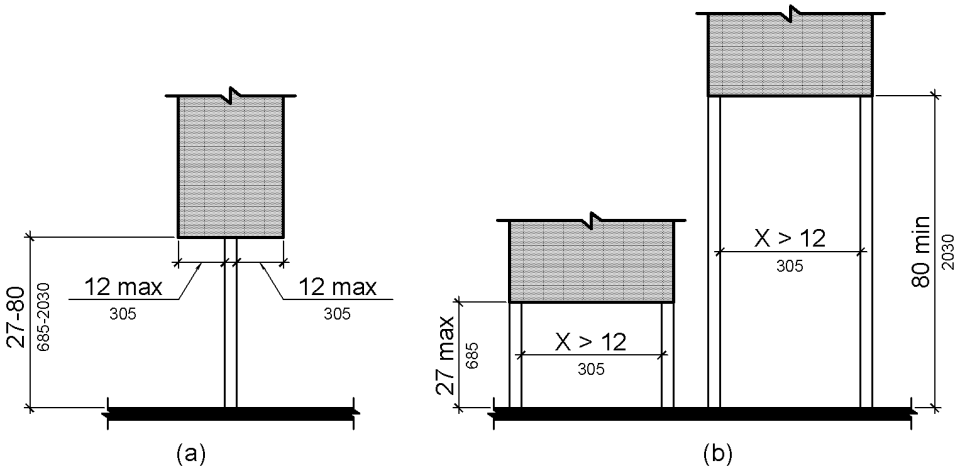

Figure T405.3
Post-Mounted Protruding Objects

T405.4 Required Clear Width. Protruding objects shall not reduce the clear width required for accessible routes.

T406 Reach Ranges

T406.1 General. Reach ranges shall comply with T406.

Advisory T406.1 General. The following table provides guidance on reach ranges for children according to age where building elements such as coat hooks, lockers, or operable parts are designed for use primarily by children. These dimensions apply to either forward or side reaches. Accessible elements and operable parts designed for adult use or children over age 12 can be located outside these ranges but must be within the adult reach ranges required by T406.

Children's Reach Ranges			
Forward or Side Reach	**Ages 3 and 4**	**Ages 5 through 8**	**Ages 9 through 12**
High (maximum)	36 in (915 mm)	40 in (1015 mm)	44 in (1120 mm)
Low (minimum)	20 in (510 mm)	18 in (455 mm)	16 in (405 mm)

T406.2 Forward Reach.

T406.2.1 Unobstructed. Where a forward reach is unobstructed, the high forward reach shall be 48 inches (1220 mm) maximum and the low forward reach shall be 15 inches (380 mm) minimum above the finish floor or ground.

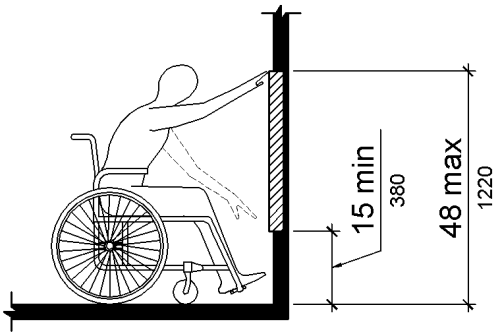

Figure T406.2.1
Unobstructed Forward Reach

T406.2.2 Obstructed High Reach. Where a high forward reach is over an obstruction, the clear floor space shall extend beneath the element for a distance not less than the required reach depth over the obstruction. The high forward reach shall be 48 inches (1220 mm) maximum where the reach depth is 20 inches (510 mm) maximum. Where the reach depth exceeds 20 inches (510 mm), the high forward reach shall be 44 inches (1120 mm) maximum and the reach depth shall be 25 inches (635 mm) maximum.

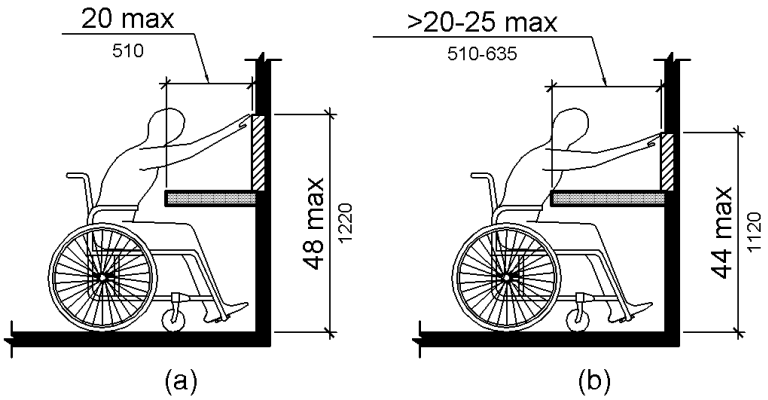

Figure T406.2.2
Obstructed High Forward Reach

T406.3 Side Reach.

T406.3.1 Unobstructed. Where a clear floor or ground space allows a parallel approach to an element and the side reach is unobstructed, the high side reach shall be 48 inches (1220 mm)

maximum and the low side reach shall be 15 inches (380 mm) minimum above the finish floor or ground.

EXCEPTION: An obstruction shall be permitted between the clear floor or ground space and the element where the depth of the obstruction is 10 inches (255 mm) maximum.

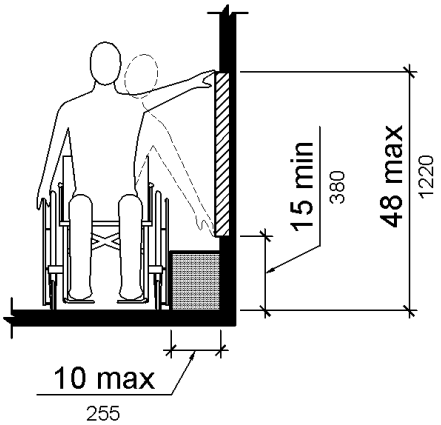

Figure T406.3.1
Unobstructed Side Reach

T406.3.2 Obstructed High Reach. Where a clear floor or ground space allows a parallel approach to an element and the high side reach is over an obstruction, the height of the obstruction shall be 34 inches (865 mm) maximum and the depth of the obstruction shall be 24 inches (610 mm) maximum. The high side reach shall be 48 inches (1220 mm) maximum for a reach depth of 10 inches (255 mm) maximum. Where the reach depth exceeds 10 inches (255 mm), the high side reach shall be 46 inches (1170 mm) maximum for a reach depth of 24 inches (610 mm) maximum.

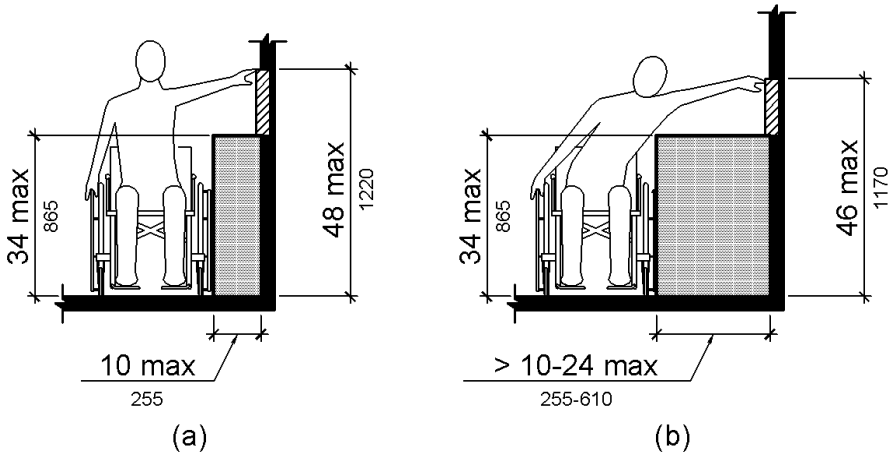

Figure T406.3.2
Obstructed High Side Reach

T407 Operable Parts

T407.1 General. Operable parts shall comply with T407.

T407.2 Height. Operable parts shall be placed within one or more of the reach ranges specified in T406.

T407.3 Operation. Operable parts shall be operable with one hand and shall not require tight grasping, pinching, or twisting of the wrist. The force required to activate operable parts shall be 5 pounds (22.2 N) maximum.

T408 Doors, Doorways, and Gate

T408.1 General. Doors, doorways, and gates shall comply with T408.

T408.2 Manual Doors, Doorways, and Manual Gates. Manual doors and doorways and manual gates intended for user passage shall comply with T408.2.

T408.2.1 Revolving Doors, Gates, and Turnstiles. Revolving doors, revolving gates, and turnstiles shall not be part of an accessible route.

T408.2.2 Double-Leaf Doors and Gates. At least one of the active leaves of doorways with two leaves shall comply with T408.2.3 and T408.2.4.

T408.2.3 Clear Width. Door openings shall provide a clear width of 32 inches (815 mm) minimum. Clear openings of doorways with swinging doors shall be measured between the face of the door and the stop, with the door open 90 degrees. Openings more than 24 inches (610 mm) deep shall provide a clear opening of 36 inches (915 mm) minimum. There shall be no projections into the required clear opening width lower than 34 inches (865 mm) above the finish floor or ground. Projections into the clear opening width between 34 inches (865 mm) and 80 inches (2030 mm) above the finish floor or ground shall not exceed 4 inches (100 mm).

EXCEPTIONS: 1. In alterations, a projection of 5/8 inch (16 mm) maximum into the required clear width shall be permitted for the latch side stop.

2. Door closers and door stops shall be permitted to be 78 inches (1980 mm) minimum above the finish floor or ground.

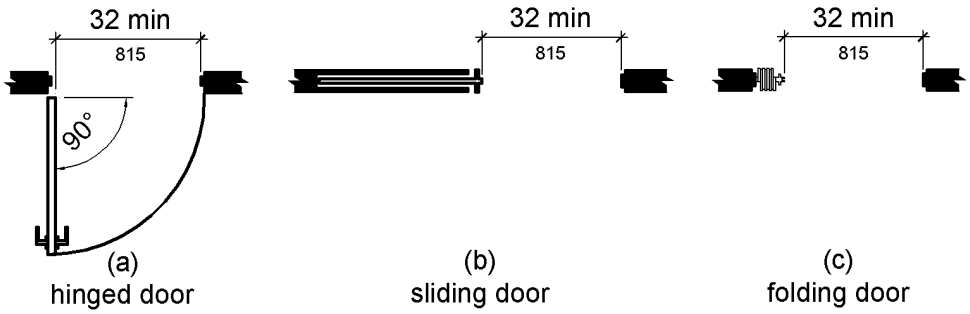

Figure T408.2.3
Clear Width of Doorways

T408.2.4 Maneuvering Clearances. Minimum maneuvering clearances at doors and gates shall comply with T408.2.4. Maneuvering clearances shall extend the full width of the doorway and the required latch side or hinge side clearance.

T408.2.4.1 Swinging Doors and Gates. Swinging doors and gates shall have maneuvering clearances complying with Table T408.2.4.1.

Table T408.2.4.1 Maneuvering Clearances at Manual Swinging Doors and Gates

Type of Use		Minimum Maneuvering Clearance	
Approach Direction	**Door or Gate Side**	**Perpendicular to Doorway**	**Parallel to Doorway (beyond latch side unless noted)**
From front	Pull	60 inches (1525 mm)	18 inches (455 mm)
From front	Push	48 inches (1220 mm)	0 inches (0 mm)[1]
From hinge side	Pull	60 inches (1525 mm)	36 inches (915 mm)
From hinge side	Pull	54 inches (1370 mm)	42 inches (1065 mm)
From hinge side	Push	42 inches (1065 mm)[2]	22 inches (560 mm)[3]
From latch side	Pull	48 inches (1220 mm)[4]	24 inches (610 mm)
From latch side	Push	42 inches (1065 mm)[4]	24 inches (610 mm)

1. Add 12 inches (305 mm) if closer and latch are provided.
2. Add 6 inches (150 mm) if closer and latch are provided.
3. Beyond hinge side.
4. Add 6 inches (150 mm) if closer is provided.

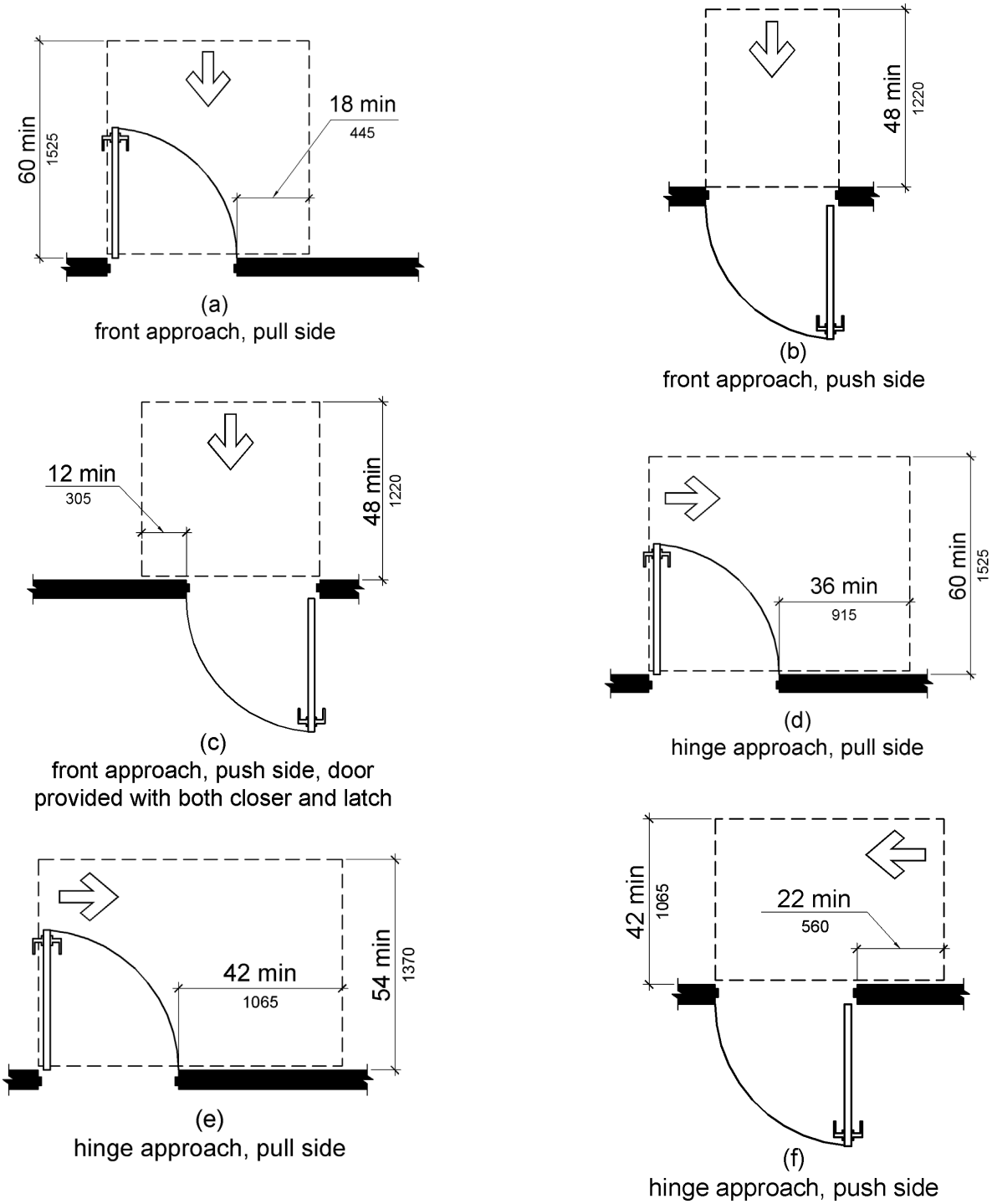

Figure T408.2.4.1
Maneuvering Clearances at Manual Swinging Doors and Gates

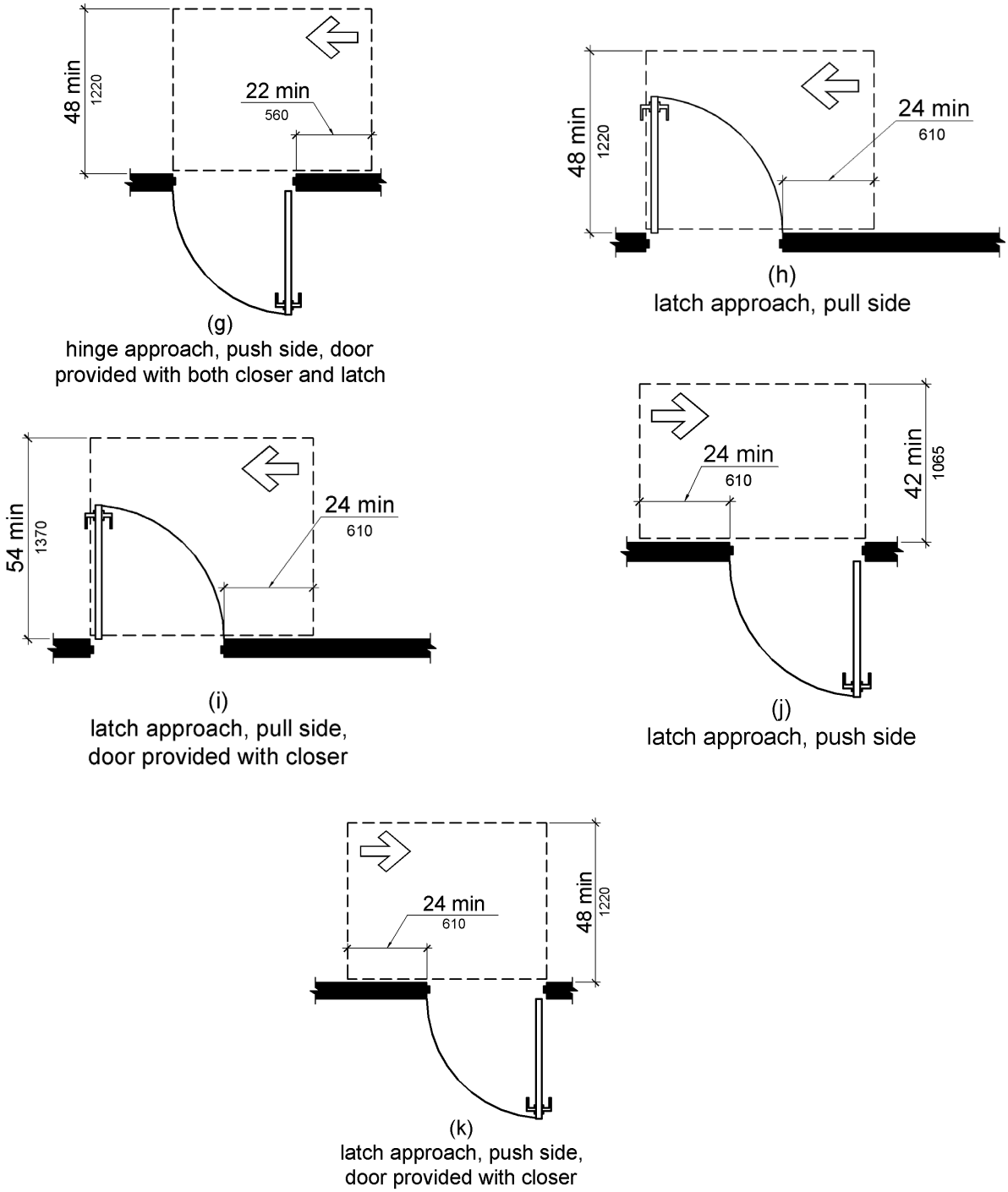

Figure T408.2.4.1
Maneuvering Clearances at Manual Swinging Doors and Gates

T408.2.4.2 Doorways without Doors or Gates, Sliding Doors, and Folding Doors. Doorways less than 36 inches (915 mm) wide without doors or gates, sliding doors, or folding doors shall have maneuvering clearances complying with Table T408.2.4.2.

Table T408.2.4.2 Maneuvering Clearances at Doorways without Doors or Gates, Manual Sliding Doors, and Manual Folding Doors

	Minimum Maneuvering Clearance	
Approach Direction	**Perpendicular to Doorway**	**Parallel to Doorway (beyond stop/latch side unless noted)**
From Front	48 inches (1220 mm)	0 inches (0 mm)
From side[1]	42 inches (1065 mm)	0 inches (0 mm)
From pocket/hinge side	42 inches (1065 mm)	22 inches (560 mm)[2]
From stop/latch side	42 inches (1065 mm)	24 inches (610 mm)

1. Doorway with no door only.
2. Beyond pocket/hinge side.

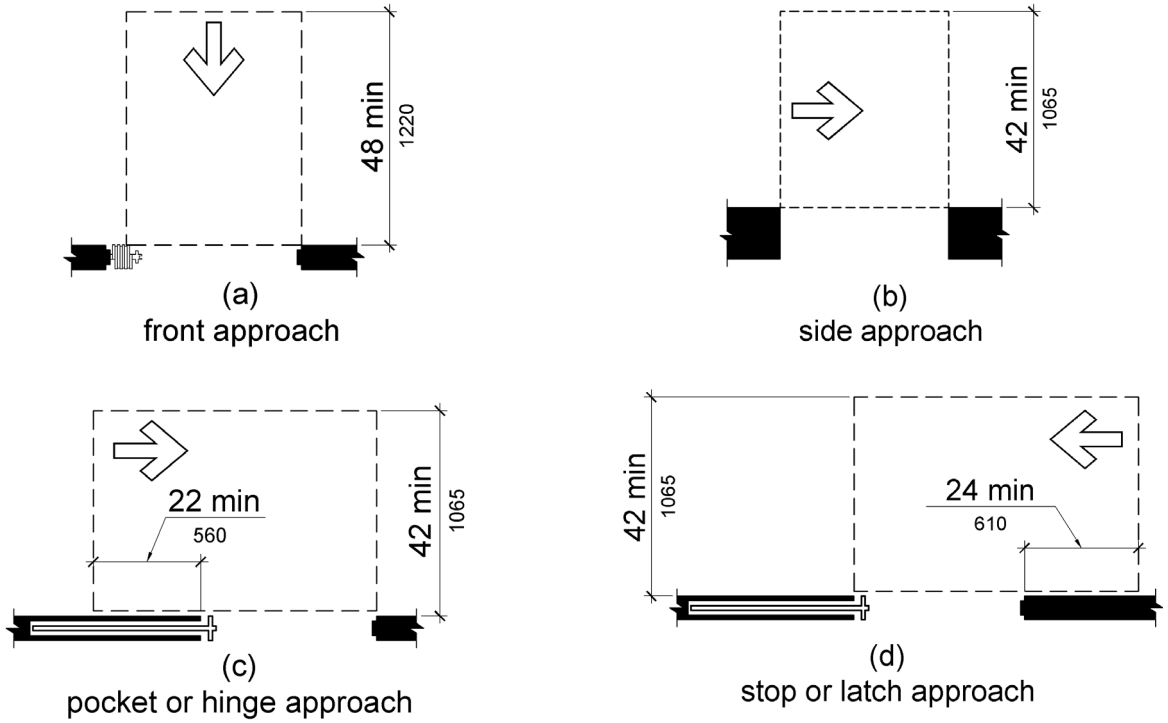

Figure T408.2.4.2
Maneuvering Clearances at Doorways without Doors, Sliding Doors, Gates, and Folding Doors

T408.2.4.3 Recessed Doors and Gates. Maneuvering clearances for forward approach shall be provided when any obstruction within 18 inches (455 mm) of the latch side of a doorway projects more than 8 inches (205 mm) beyond the face of the door, measured perpendicular to the face of the door or gate.

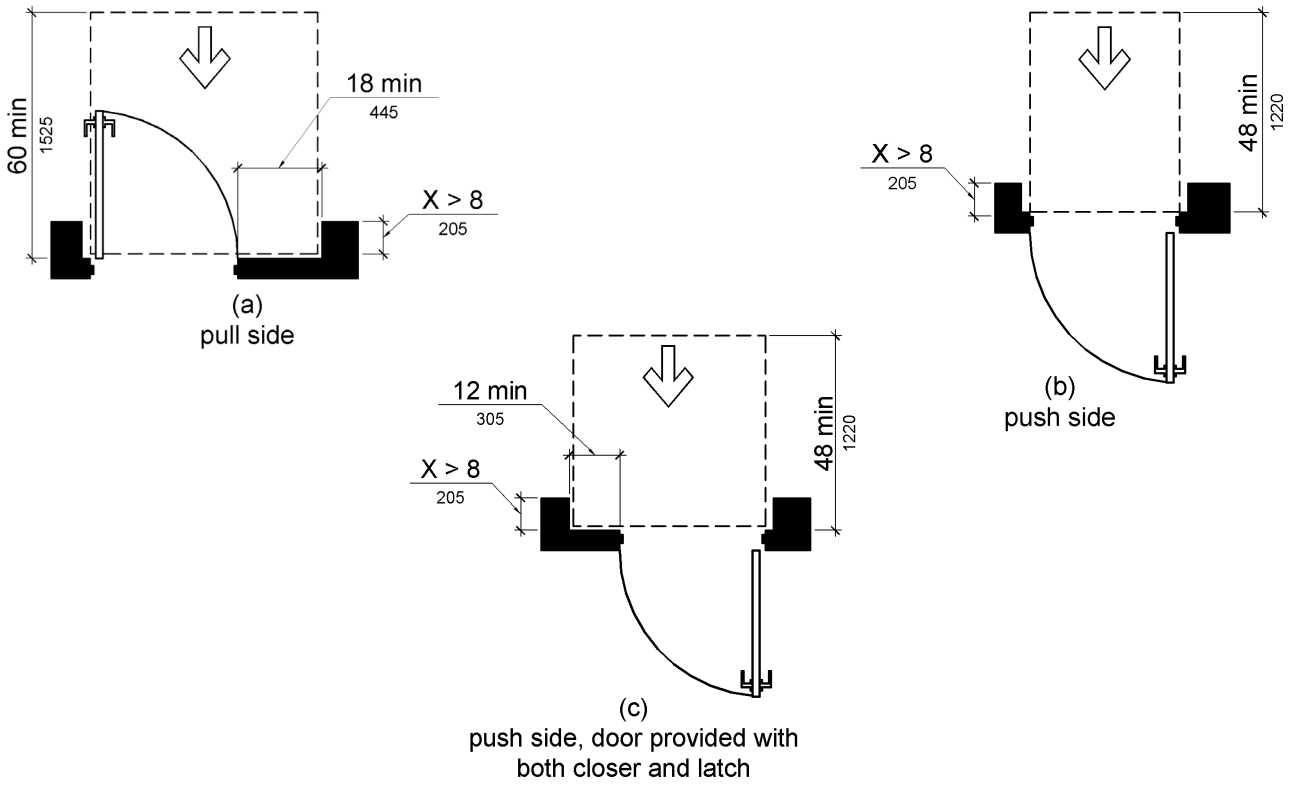

Figure T408.2.4.3
Maneuvering Clearances at Recessed Doors and Gates

T408.2.4.4 Floor or Ground Surface. Floor or ground surface within required maneuvering clearances shall be stable and firm. Changes in level are not permitted.

EXCEPTIONS: 1. Slopes not steeper than 1:48 shall be permitted.

2. Changes in level at thresholds complying with T408.2.5 shall be permitted.

T408.2.5 Thresholds. Thresholds, if provided at doorways, shall be ½ inch (13 mm) high maximum. Raised thresholds and changes in level at doorways shall comply with T402 and T303.

EXCEPTION: Existing or altered thresholds ¾ inch (19 mm) high maximum that have a beveled edge on each side with a slope not steeper than 1:2 shall not be required to comply with T408.2.5.

T408.2.6 Doors in Series and Gates in Series. The distance between two hinged or pivoted doors in series and gates in series shall be 48 inches (1220 mm) minimum plus the width of doors or gates swinging into the space.

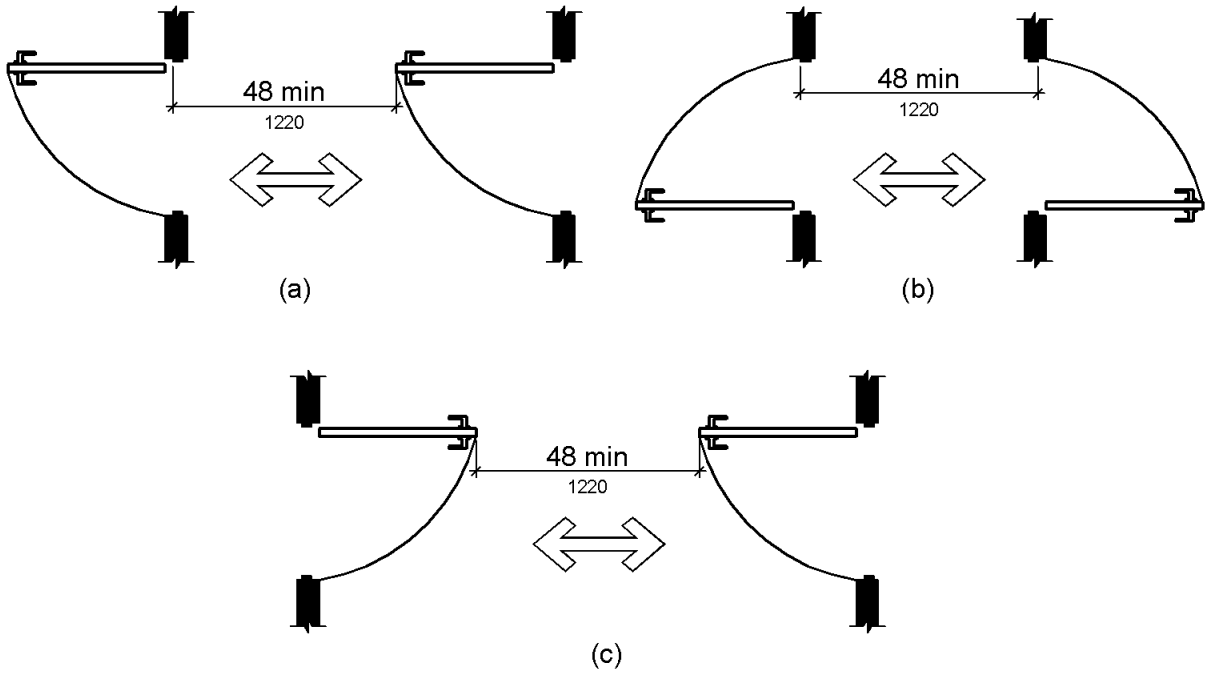

Figure T408.2.6
Doors in Series and Gates in Series

T408.2.7 Door and Gate Hardware. Handles, pulls, latches, locks, and other operable parts on doors and gates shall comply with T407.3. Operable parts of such hardware shall be 34 inches (865 mm) minimum and 48 inches (1220 mm) maximum above the finish floor or ground. Where sliding doors are in the fully open position, operating hardware shall be exposed and usable from both sides.

EXCEPTIONS: 1. Existing locks shall be permitted in any location at existing glazed doors without stiles, existing overhead rolling doors or grilles, and similar existing doors or grilles that are designed with locks that are activated only at the top or bottom rail.

2. Access gates in barrier walls and fences protecting pools, spas, and hot tubs shall be permitted to have operable parts of the release of latch on self-latching devices at 54 inches (1370 mm) maximum above the finish floor or ground provided the self-latching devices are not also self-locking devices and operated by means of a key, electronic opener, or integral combination lock.

Advisory T408.2.7 Door and Gate Hardware. Door hardware that can be operated with a closed fist or a loose grip accommodates the greatest range of users. Hardware that requires simultaneous hand and finger movements require greater dexterity and coordination, and is not recommended.

T408.2.8 Closing Speed. Door and gate closing speed shall comply with T408.2.8.

T408.2.8.1 Door Closers and Gate Closers. Door closers and gate closers shall be adjusted so that from an open position of 90 degrees, the time required to move the door to a position of 12 degrees from the latch is 5 seconds minimum.

T408.2.8.2 Spring Hinges. Door and gate spring hinges shall be adjusted so that from the open position of 70 degrees, the door or gate shall move to the closed position in 1.5 seconds minimum.

T408.2.9 Door and Gate Opening Force. Fire doors shall have a minimum opening force allowable by the appropriate administrative authority. The force for pushing or pulling open a door or gate other than fire doors shall be as follows:

1. Interior hinged doors and gates: 5 pounds (22.2 N) maximum.
2. Sliding or folding doors: 5 pounds (22.2 N) maximum.

These forces do not apply to the force required to retract latch bolts or disengage other devices that hold the door or gate in a closed position.

Advisory T408.2.9 Door and Gate Opening Force. The maximum force pertains to the continuous application of force necessary to fully open a door, not the initial force needed to overcome the inertia of the door. It does not apply to the force required to retract bolts or to disengage other devices used to keep the door in a closed position.

T408.2.10 Door and Gate Surfaces. Swinging door and gate surfaces within 10 inches (255 mm) of the finish floor or ground measured vertically shall have a smooth surface on the push side extending the full width of the door or gate. Parts creating horizontal or vertical joints in these surfaces shall be within 1/16 inch (1.6 mm) of the same plane as the other. Cavities created by added kick plates shall be capped.

EXCEPTIONS: 1. Sliding doors shall not be required to comply with 408.2.10.
2. Tempered glass doors without stiles and having a bottom rail or shoe with the top leading edge tapered at 60 degrees minimum from the horizontal shall not be required to meet the 10 inch (255 mm) bottom smooth surface height requirement.
3. Doors and gates that do not extend to within 10 inches (255 mm) of the finish floor or ground shall not be required to comply with T408.2.10.
4. Existing doors and gates without smooth surfaces within 10 inches (255 mm) of the finish floor or ground shall not be required to provide smooth surfaces complying with T408.2.10 provided that if added kick plates are installed, cavities created by such kick plates are capped.

T408.2.11 Vision Lights. Doors, gates, and side lights adjacent to doors or gates, containing one or more glazing panels that permit viewing through the panels shall have the bottom of at least one glazed panel located 43 inches (1090 mm) maximum above the finish floor.

EXCEPTION: Vision lights with the lowest part more than 66 inches (1675 mm) from the finish floor or ground shall not be required to comply with T408.2.11.

T409 Pit Toilets

T409.1 General. Pit toilets shall comply with T409.2 through T409.6. Where doors are provided, they shall comply with T407.

T409.2 Location. The pit toilet shall be positioned with a wall or partition to the rear and to one side. The centerline of the pit toilet shall be 16 inches (405 mm) minimum to 18 inches (455 mm) maximum from the side wall or partition. Pit toilets shall be arranged for a left-hand or right-hand approach.

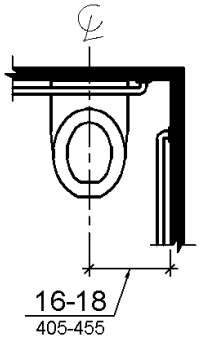

Figure T409.2
Pit Toilet Location

T409.3 Clearance. Clearances around pit toilet and in pit toilet compartments shall comply with T409.3.

T409.3.1 Size. Clearance around a pit toilet shall be 60 inches (1525 mm) minimum measured perpendicular from the side wall and 56 inches (1420 mm) minimum measured perpendicular from the rear wall.

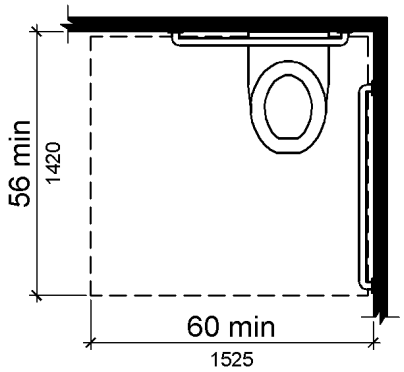

Figure T409.3.1
Size of Clearance at Pit Toilets

T409.3.2 Overlap. The required clearance around the pit toilet shall be permitted to overlap the pit toilet, associated grab bars, dispensers, sanitary napkin disposal units, coat hooks, shelves, outdoor recreation access routes, clear floor space and clearances required at other fixtures, and the turning space. No other fixtures or obstructions shall be located within the required pit toilet clearance.

Advisory T409.3.2 Overlap. When the door to the pit toilet compartment is placed directly in front of the pit toilet, the pit toilet cannot overlap the required maneuvering clearance for the door inside the room.

T409.4 Seats. The seat height of a pit toilet above the finish floor shall be 17 inches (430 mm) minimum and 19 inches (485 mm) maximum measured to the top of the seat. Seats shall not be sprung to return to a lifted position.

T409.5 Pit Toilets with Walls - Grab Bars. Where pit toilets are designed with walls, grab bars complying with T409.5 shall be provided. Grab bars shall be provided on the side wall closest to the pit toilet and on the rear wall.

T409.5.1 Side Wall. The side wall grab bar shall be 42 inches (1065 mm) long minimum, located 12 inches (305 mm) maximum from the rear wall and extending 54 inches (1370 mm) minimum from the rear wall.

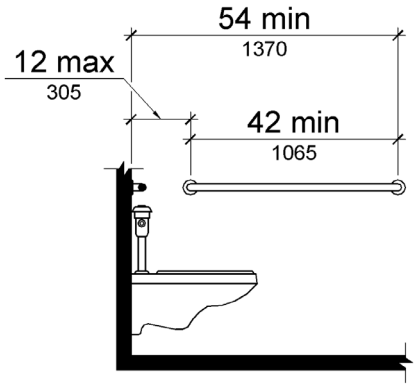

Figure T409.5.1
Side Wall Grab Bar at Pit Toilets

T409.5.2 Rear Wall. The rear wall grab bar shall be 36 inches (915 mm) long minimum and extend from the centerline of the pit toilet 12 inches (305 mm) minimum on one side and 24 inches (610 mm) minimum on the other side.

EXCEPTION: The rear grab bar shall be permitted to be 24 inches (610 mm) long minimum, centered on the pit toilet, where wall space does not permit a length of 36 inches (915 mm) minimum due to the location of a recessed fixture adjacent to the pit toilet.

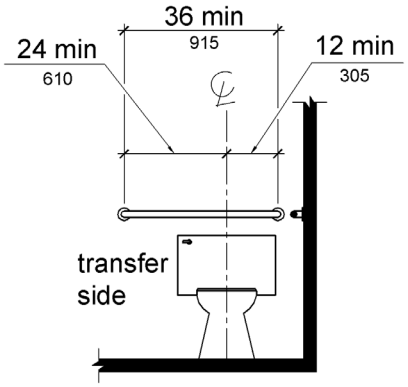

Figure T409.5.2
Rear Wall Grab Bar at Pit Toilets

T410 Shower Spray Unit

T410.1 Shower Spray Unit. A shower spray unit with a hose 59 inches (1500 mm) long minimum that can be used both as a fixed-position shower head and as a hand-held shower shall be provided. The shower spray unit shall have an on/off control with a non-positive shut-off. If an adjustable-height shower head on a vertical bar is used, the bar shall be installed so as not to obstruct the use of grab bars.

> **Advisory T410.1 Shower Spray Unit.** Ensure that hand-held shower spray units are capable of delivering water pressure substantially equivalent to fixed shower heads.

T411 Grab Bar

T411.1 General. Grab bars in pit toilets and outdoor rinsing showers shall comply with T411.

T411.2 Cross Section. Grab bars shall have a cross section complying with T411.2.1 or T411.2.2.

T411.2.1 Circular Cross Section. Grab bars with circular cross sections shall have an outside diameter of 1 ¼ inches (32 mm) minimum and 2 inches (51 mm) maximum.

T411.2.2 Non-Circular Cross Section. Grab bars with non-circular cross sections shall have a cross-section dimension of 2 inches (51 mm) maximum and a perimeter dimension of 4 inches (100 mm) minimum and 4.8 inches (120 mm) maximum.

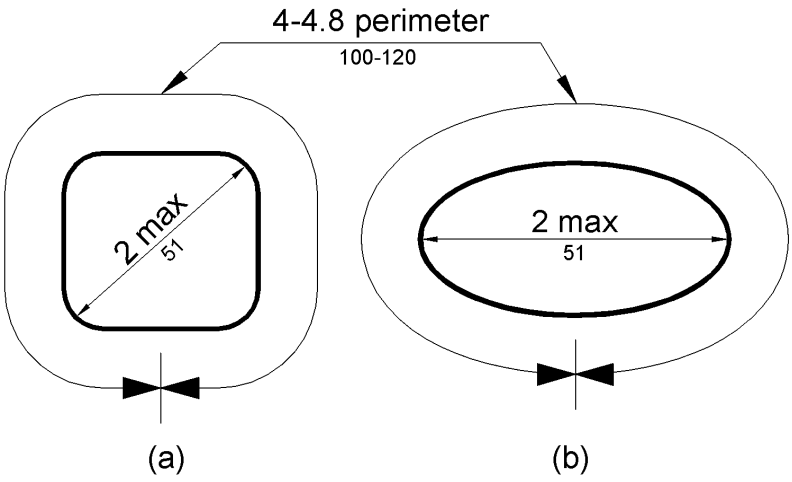

Figure T411.2.2
Grab Bar Non-Circular Cross Section

T411.3 Spacing. The space between the wall and the grab bar shall be 1 ½ inches (38 mm). The space between the grab bar and projecting objects below and at the ends shall be 1 ½ inches (38 mm) minimum. The space between the grab bar and projecting objects above shall be 12 inches (305 mm) minimum.

EXCEPTION: The space between the grab bars and shower controls, shower fittings, and other grab bars above shall be permitted to be 1 ½ inches (38 mm) minimum.

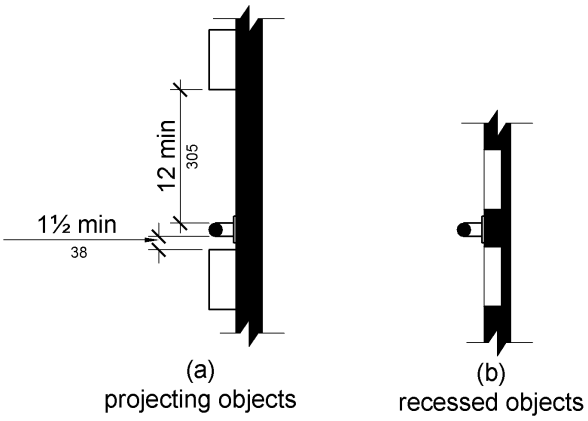

Figure T411.3
Spacing of Grab Bars

T411.4 Position of Grab Bars for Pit Toilets. Grab bars shall be installed in a horizontal position, 33 inches (840 mm) minimum and 36 inches (915 mm) maximum above the finish floor measured to the top of the gripping surface.

T411.5 Surface Hazards. Grab bars and any wall or other surfaces adjacent to grab bars shall be free of sharp or abrasive elements and shall have rounded edges.

T411.6 Fittings. Grab bars shall not rotate within their fittings.

T411.7 Installation. Grab bars shall be installed in any manner that provides a gripping surface at the specified locations and that does not obstruct the required clear floor space.

T411.8 Structural Strength. Allowable stresses shall not be exceeded for materials used when a vertical or horizontal force of 250 pounds (1112 N) is applied at any point on the grab bar, fastener, mounting device, or supporting structure.

T412 Symbol of Accessibility

T412.1 General. Symbols of accessibility shall comply with T412.

T412.2 Finish and Contrast. Symbols of accessibility and their background shall have a non-glare finish. Symbols of accessibility shall contrast with their background with either a light symbol on a dark background or a dark symbol on a light background.

> **Advisory T412.2 Finish and Contrast.** Signs are more legible for persons with low vision when characters contrast as much as possible with their background. Additional factors affecting the ease with which the text can be distinguished from its background include shadows cast by lighting sources, surface glare, and the uniformity of the text and background colors and textures.

T412.3 Symbol

T412.3.1 International Symbol of Accessibility. The International Symbol of Accessibility shall comply with Figure T412.3.1.

Figure T412.3.1
International Symbol of Accessibility