Toilet Rooms

This guide explains requirements in the ADA Standards for toilet rooms.

Required Compliance [§213]

Plumbing and building codes address the number and type of toilet rooms and toilet fixtures required for a facility. The ADA Standards, on the other hand, do not address the number of toilet rooms or fixtures required for a facility, but instead specify which ones must be accessible where provided. In new construction, access is required to all toilet rooms, including those for employees. However, where single user toilet rooms are clustered in one location, at least half for each use must comply (§213.2., Ex. 4). In the case of single user portable units, access is required to at least 5% at each cluster, excluding those on construction sites for construction personnel which are fully exempt (§213.2, Ex. 3, §203.2).

Clustered Single User Toilet Rooms

Clustered single user toilet rooms (2 minimum) are those that are next to, or close to, one another. No more than 50% for each use within a cluster must comply. Compliant toilet rooms and portable units must be labeled by the International Symbol of Accessibility unless all are accessible (§213.2, Ex. 3, §216.8).

Unisex (Single-Use or Family) Toilet Rooms [§213.2]

Where multi-user toilet rooms are provided, accessible unisex toilet rooms cannot serve as a substitute for access to multi-user rooms, except in alterations where making multi-user rooms comply is not technically feasible (§213.2, Ex. 1). Otherwise, where multi-user and unisex restrooms are provided, both types must comply. Providing an accessible unisex toilet room in addition to multi-user toilet rooms is helpful for those who use personal care assistants of the opposite sex. The International Building Code (IBC) requires accessible unisex or "family" toilet rooms in assembly and mercantile occupancies where a total of six or more toilet fixtures for each sex is required (§1108.2.1 in the 2000 IBC and §1109.2.1 in later editions). The ADA Standards require that unisex toilet rooms, where provided, have privacy latches and contain at most one lavatory, one water closet, and one urinal (or a second water closet) (§213.2.1).

Medical Care and Long-Term Care Facilities [§223.1, §805.4]

In licensed medical care and long-term care facilities, toilet rooms that are part of accessible patient or resident sleeping rooms, excluding critical or intensive care patient sleeping rooms, must comply (§223.1, Ex., §805.4). The Standards cover independent accessibility and do not address design for use that is assisted by medical or resident care personnel. Features for assisted use that conflict with the Standards can be provided in those toilet rooms serving rooms not required to comply with the Standards. Otherwise any departure from the Standards must be based on the provision for "equivalent facilitation" (§103) which permits alternatives to specified requirements that provide substantially equivalent or greater accessibility and usability. This means that the alternative solution is just as, if not more, effective than what is required by the Standards in terms of accessibility, usability, convenience, and reliability for people with disabilities.

Toilet Room Location

The Standards specify the location of toilet rooms in two instances:

- Where toilet rooms are provided in multi-story facilities that are exempt from the requirement for vertical access between stories (§206.2.3, Ex. 1 or 2), a toilet room must be provided on a story that is connected to an accessible entrance by an accessible route (§213.1). Toilet rooms on other stories must fully comply as well.
- In alterations where it is technically infeasible to make men's and women's rooms comply, an accessible unisex toilet room is permitted as an alternative if it is located in the same area and on the same floor as the existing toilet rooms (§213.2, Ex. 1).

Additions [§202.2]

Additions are required to comply with requirements in the Standards for new construction. Each toilet room of an addition must comply as would be required in new construction.

Alterations [§202.3]

When existing toilet rooms are altered, the Standards apply according to the planned scope of work. If one toilet room on a floor is altered, the Standards apply to that room only; if all toilet rooms on a floor are altered, the Standards apply to each toilet room that would be required to comply in new construction. The scope of work also determines which technical requirements apply. If some, but not all, elements in a toilet room are altered, only those elements altered must comply. If a room or space is completely altered (or built new as part of an alteration), the entire room or space must comply.

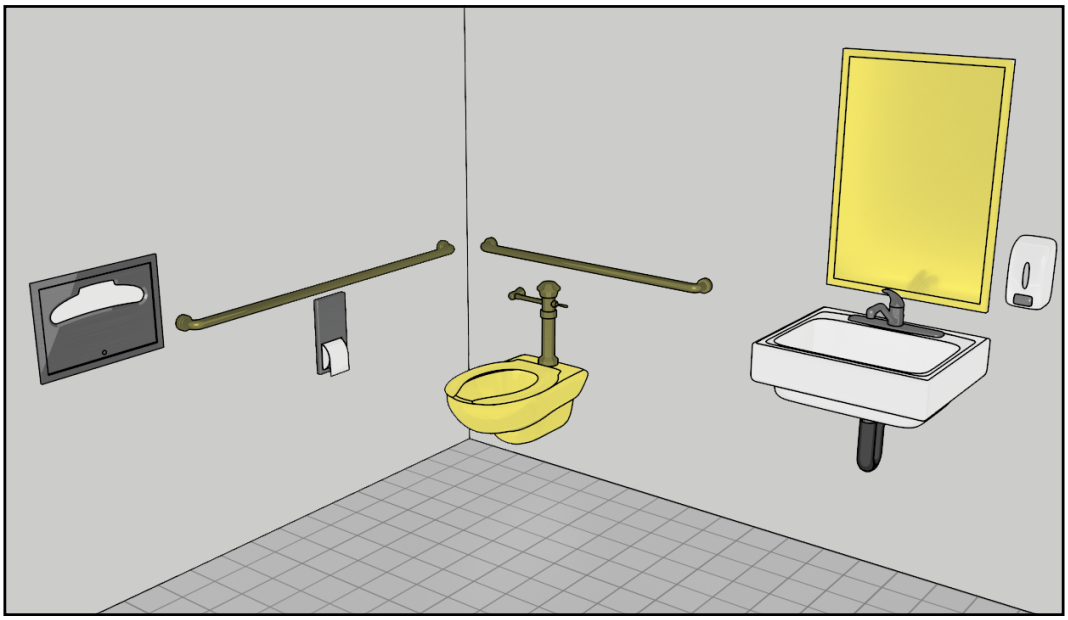

In a project involving alterations to the toilet, grab bars, faucet controls, and mirror in a restroom, the Standards apply to these elements but not to those that remain unaltered. In more extensive projects where additional elements are altered, application of the Standards is greater, commensurate with the scope of work.

Recommendation: While only those elements altered are required to comply, it is advisable to maximize opportunities for accessibility in alterations. Alteration of multiple elements in a room or space may provide a cost-effective opportunity to make the entire room or space fully accessible.

Compliance in an alteration is not required where it is "technically infeasible." The term is defined as "something that has little likelihood of being accomplished because existing structural conditions would require removing or altering a load-bearing member that is an essential part of the structural frame; or because other existing physical or site constraints prohibit modification or addition of elements, spaces, or features that are in full and strict compliance with the minimum requirements." For example, combining two toilet compartments to create an accessible compartment may be technically infeasible where it would reduce the fixture count below the number required by the applicable plumbing code.

When it is technically infeasible to make existing men's and women's rooms comply, an accessible unisex toilet room can be provided instead if it is in the same area and on the same floor as the existing toilet rooms (§213.2, Ex. 1). Where technical infeasibility is encountered, compliance is still required to the maximum extent feasible.

Alterations and Additions to Primary Function Areas [§202.4]

When an area containing a primary function (a major activity intended for a facility) is altered or added to a facility, an "accessible path of travel" is required. The accessible path of travel, which must extend from site arrival points to the primary function area, includes provided restrooms (at least one for each sex or, if only unisex restrooms are provided, at least one unisex restroom), telephones, and drinking fountains, where provided, that serve the primary function area. The accessible path of travel is required to the extent that it does not cost more than 20% of the total cost of the work to the primary function area. Compliance is required up to the point this cost cap is reached, even where it does not result in a fully accessible path of travel. See the Alterations and Additions Guide.

Alterations to Qualified Historic Facilities [§202.5, §213]

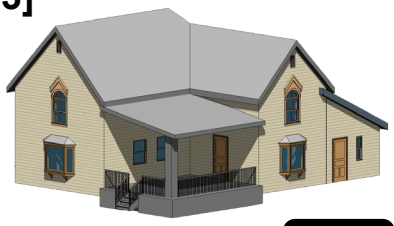

The Standards provide certain exceptions for qualified historic facilities where compliance in an alteration would threaten or destroy the historic integrity or significance of a facility as determined by the appropriate State Historic Preservation Official or Advisory Council on Historic Preservation. One of these exceptions allows access to be provided to a unisex toilet room or to one men's and one women's room regardless of the number of toilet rooms altered or added (§213.2, Ex. 2).

This guide notes some provisions in the International Building Code (IBC) and the *ICC A117.1 Standards for Accessible and Usable Buildings and Facilities* that are not found in the ADA Standards. For example, the A117.1 standard, which provides technical provisions and is referenced by the IBC, requires a vertical grab bar at water closets. Not all differences between the ADA Standards and editions of the IBC and A117.1 standard are noted in this guide.

Components of Accessible Single User Toilet Room

Requirements in the Standards for toilet rooms address doors, turning space, plumbing fixtures, mirrors, dispensers, shelves, and other elements provided. Other provisions in the Standards also apply.

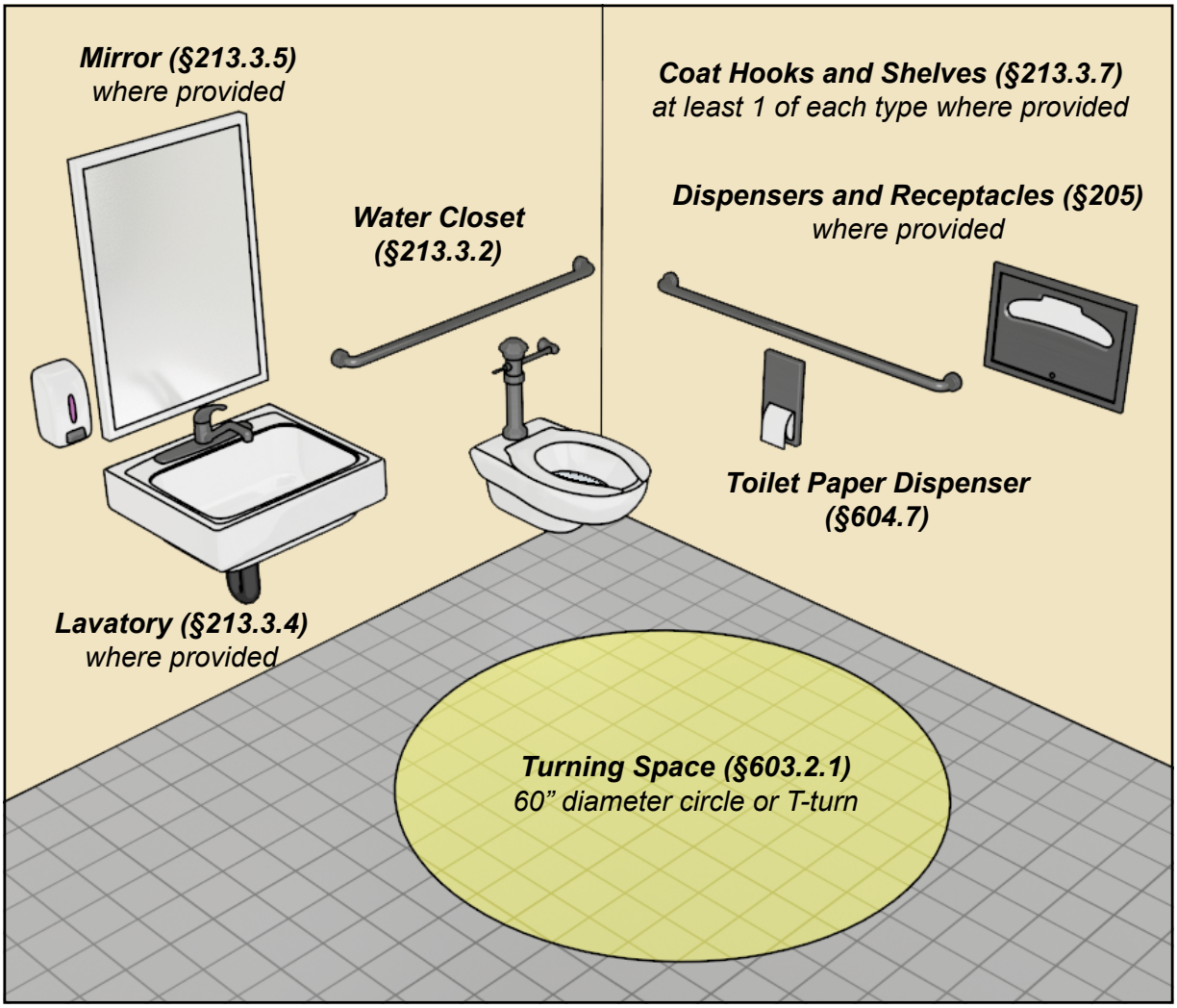

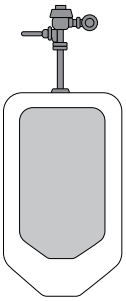

Urinals (§213.3.3)
An accessible urinal is required only in toilet rooms where more than one urinal is provided.

Water Closets [§213.3.2, §604]

Criteria for water closets address location, clearance, seats, grab bars, flush controls, and dispensers. Water closets can be arranged for either a left-hand or right-hand approach.

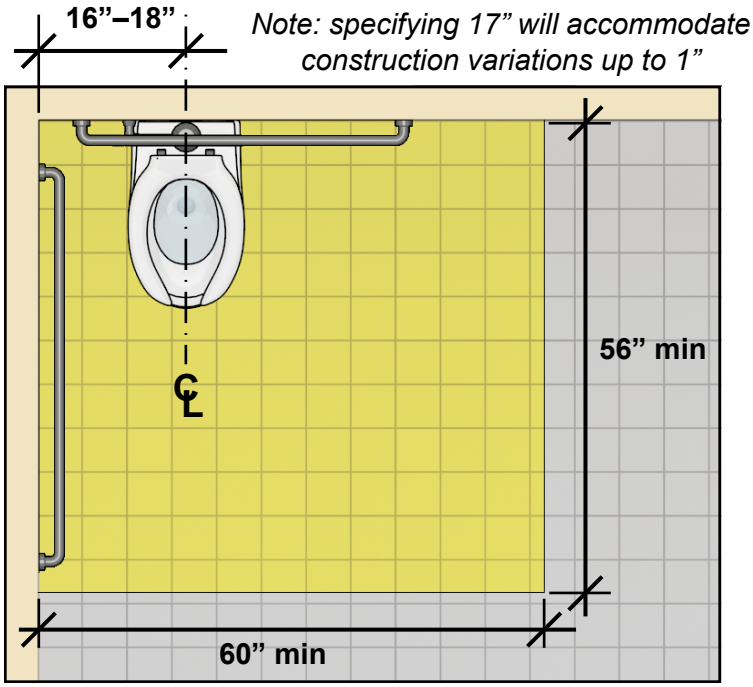

The required clearance provides space for approach and transfer to water closets. The water closet, associated grab bars, toilet paper dispensers, seat cover and other dispensers, coat hooks, shelves, and sanitary napkin disposal units are the only elements that can overlap this clearance (§604.3.2). Other elements and fixtures cannot overlap the required water closet clearance. (In residential dwelling units, a lavatory can overlap a portion of the water closet clearance under certain conditions.)

Location, Clearance, Seat Height and Flush Controls

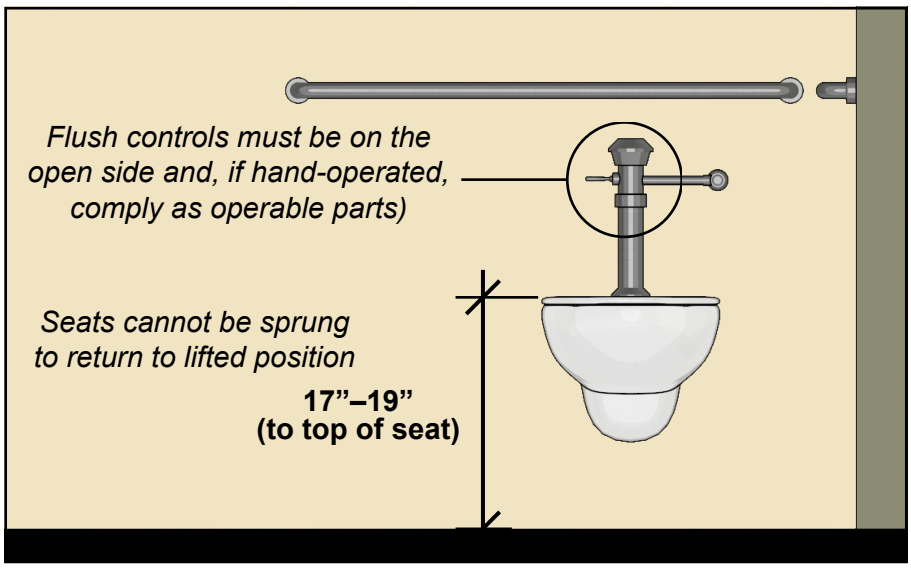

Recommendation: Locate flush valves and related plumbing to the side of the water closet or behind walls to keep the rear grab bar clear.

Grab Bars [§604.5, §609]

Grab bars are required to be mounted on the walls beside and behind the water closet. They can be separate or continuous. When returned to walls, the length is measured to the centerline of the return, consistent with industry practice. When attached at other points along the bar, the length is measured to the end of the bar.

Rear Grab Bar

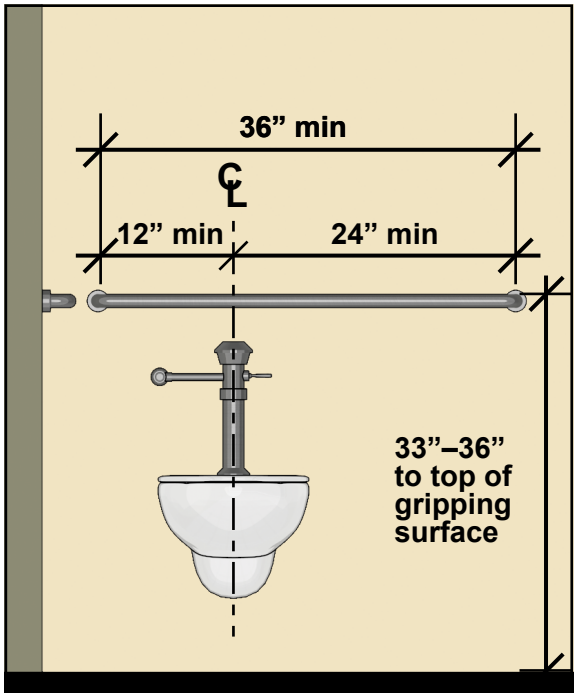

Side Grab Bar

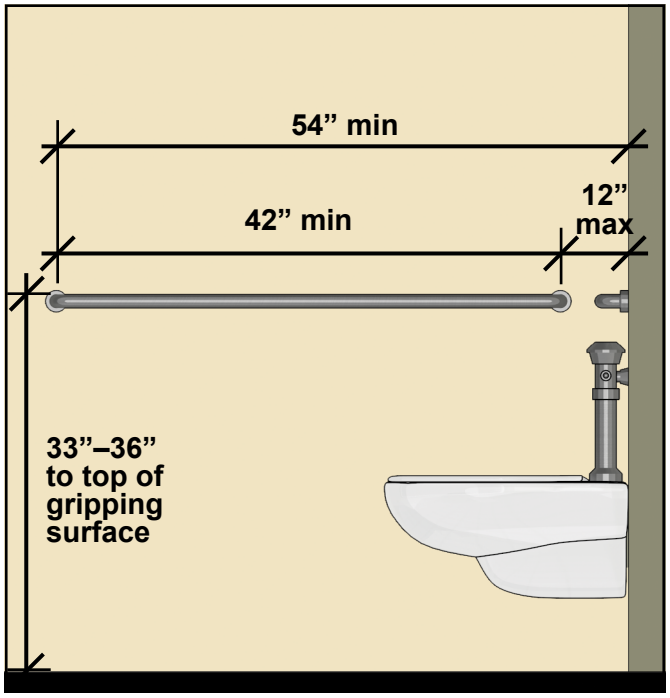

The rear grab bar can be shifted to the open side of the water closet or split where it would conflict with the location of flush controls required by applicable codes (§604.5.2).

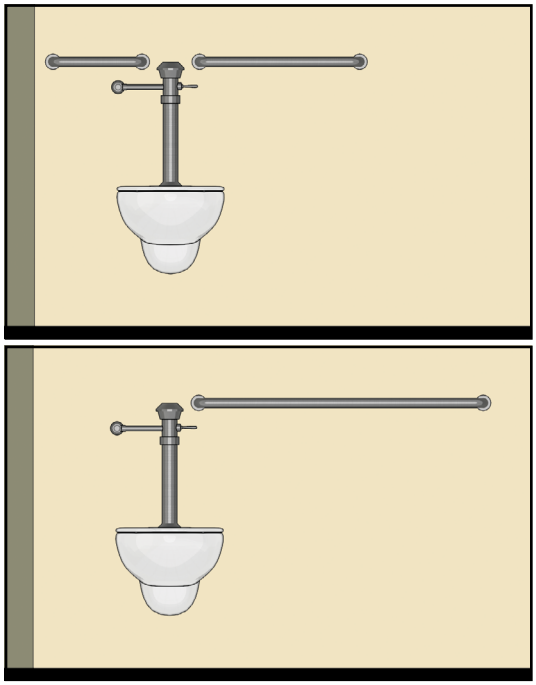

Grab bars and wall or other surfaces adjacent to them must be free of abrasive or sharp elements. Any projecting object must be located at least 12” above grab bars and at least 1½” from the bottom and ends of grab bars so that the reach and use of grab bars is not impeded.

Minimum Clearances at Grab Bars

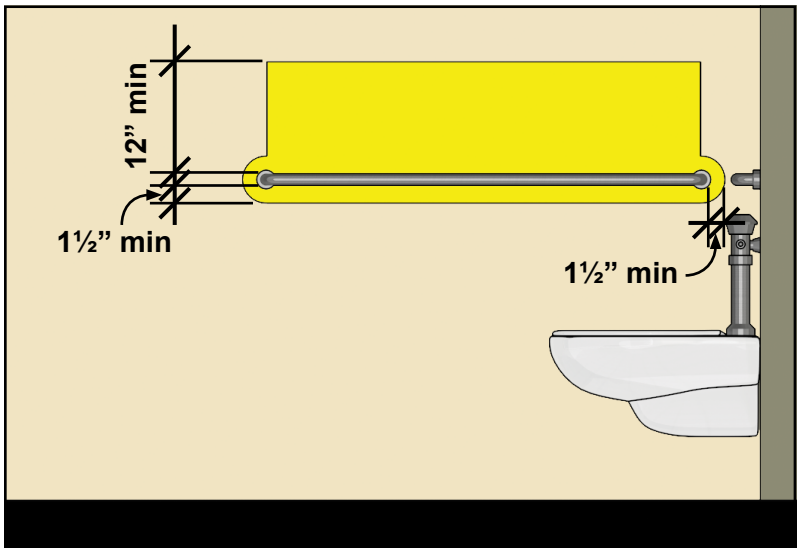

Grab bars can have circular or non-circular cross-sections but must have rounded edges. The 1½” clearance between the grab bar and wall is not a minimum but an absolute dimension to prevent entrapment. Grab bars cannot rotate within fittings. The structural strength of grab bars must withstand a vertical or horizontal force of 250 lbs. at any point on the grab bar, fastener, mounting device, or supporting structure.

Cross Section and Clearance

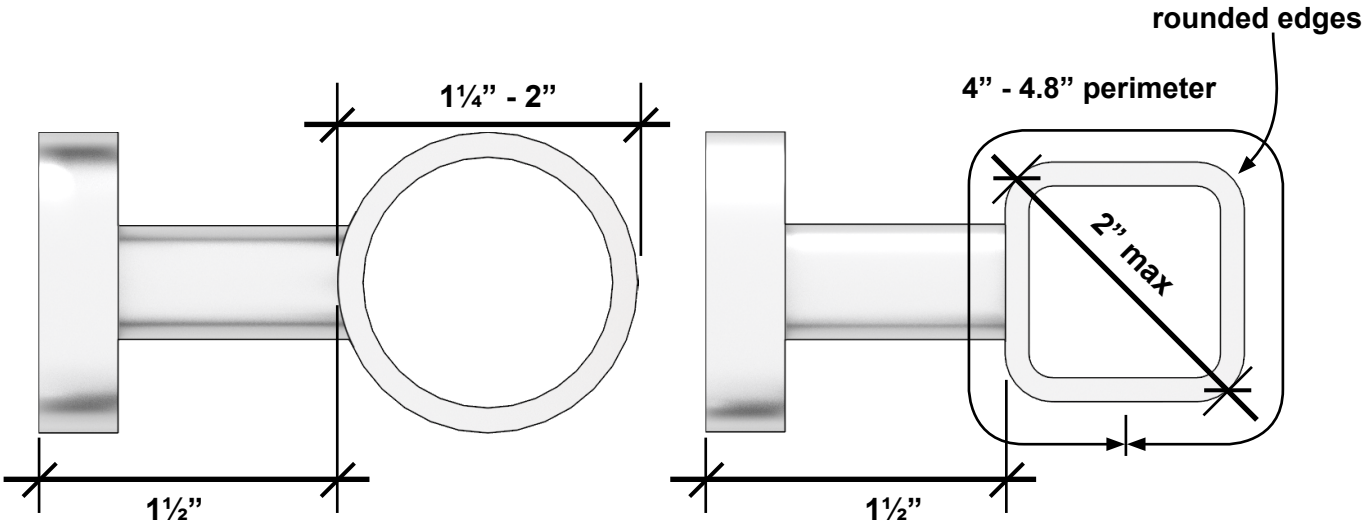

The Standards do not require or address additional folding or swing-away grab bars on the open side of the water closet. However, if provided, they must be mounted so that they do not interfere with use of the required grab bars or the clear floor space at water closets. Also, it is important they are properly secured (although this is not addressed by the Standards).

Vertical Grab Bar (ICC A117.1 Standard)

The *ICC A117.1 Standard for Accessible and Usable Buildings and Facilities*, which is referenced by the International Building Code, requires an 18” min. vertical grab bar at water closets. The ADA Standards do not require this grab bar but allow a second grab bar to be within the 12” clearance above the horizontal grab bar (§609.3) if there is a separation of 1½” min.

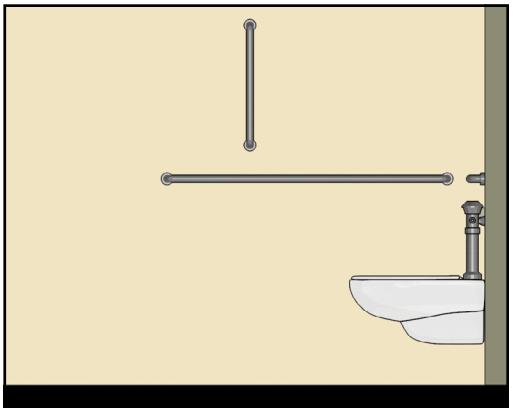

Toilet Paper Dispensers [§604.7]

Toilet paper dispensers must be within accessible reach from the water closet. They can be located below or above (but not behind) grab bars, though it is important that non-recessed dispensers be outside the 12” minimum high clearance above the bar yet not exceed the 48” maximum height (measured to the outlet) of the dispenser. Dispensers must allow continuous paper flow and cannot control delivery.

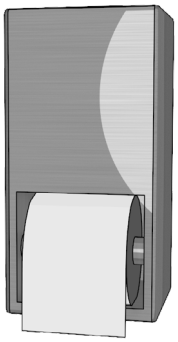

Recommendations: Recessed toilet paper dispensers provide better access by keeping space at the water closet clear. Large-roll dispensers can obstruct space at water closets and can be hard to reach due to their width and the required placement from the water closet measured to the dispenser centerline.

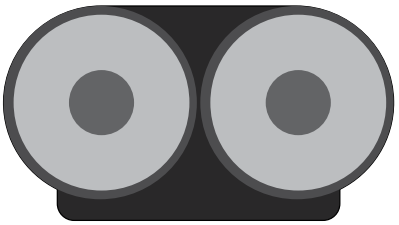

Recessed Dispenser Location

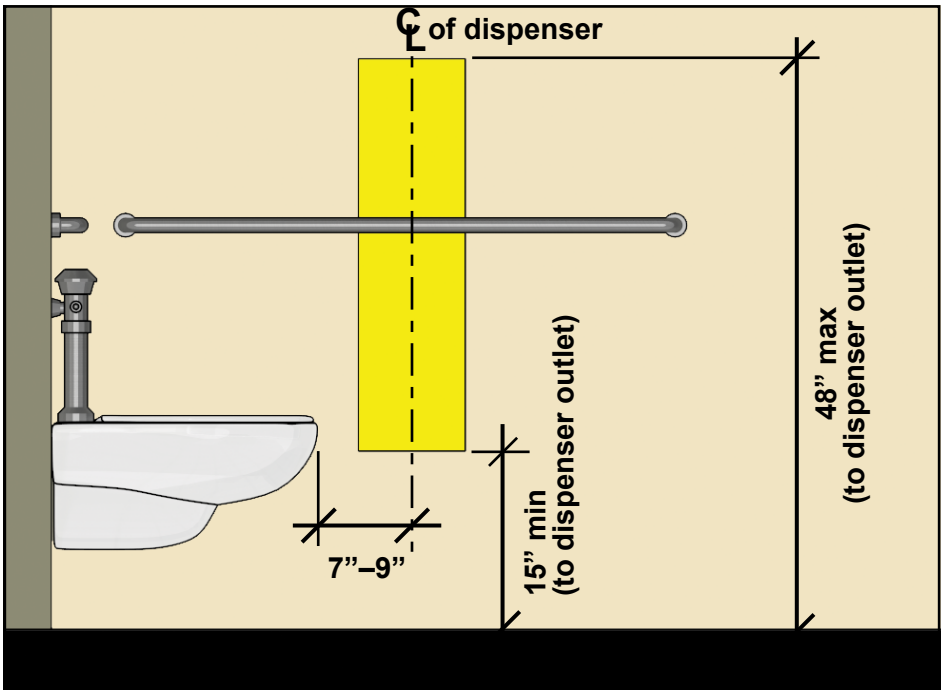

Non-Recessed Dispenser Location

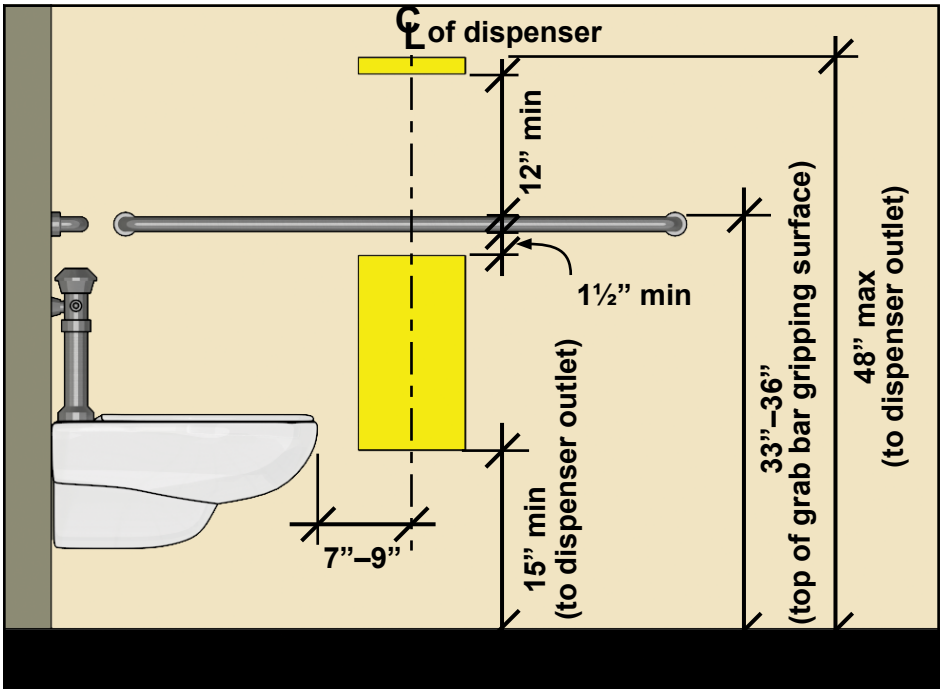

If the grab bar is 36” high, a non-recessed toilet paper dispenser located above the bar must have an outlet at exactly 48” high to accommodate both the max. reach height and the 12” min. clearance above the grab bar.

Example Single User Toilet Room

The Standards do not directly specify the size of toilet rooms which is determined by a variety of factors, including the layout and number of fixtures, the presence of other features, such as baby changing tables, and even the swing of doors. How various space requirements are met also determine the minimum room size, including required clearances at fixtures and other elements, turning space, and door maneuvering clearance.

Accessible toilet rooms can be configured in many different ways. The layout shown here is used only as an example in illustrating the features of a compliant toilet room. These designs show the minimum dimensions specified in the Standards. Providing additional space in toilet rooms will enhance usability.

Water Closet Clearance

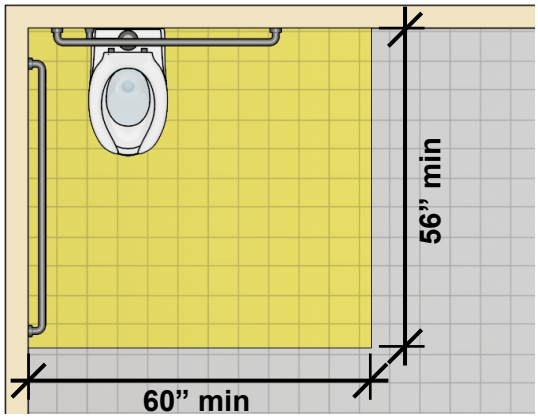

Water closets can be placed in any corner.

Lavatory Clearance

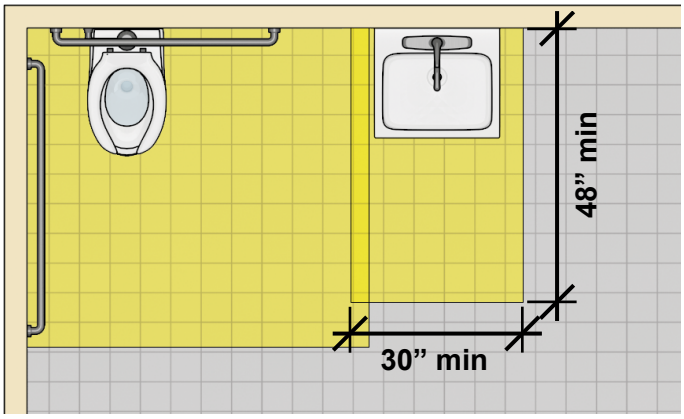

The lavatory cannot overlap the water closet clearance (except in residential dwelling units), but the clearance at the lavatory can. It is advisable (but not required) to nominally center the lavatory on the clear floor space.

Option: Recessed Lavatory

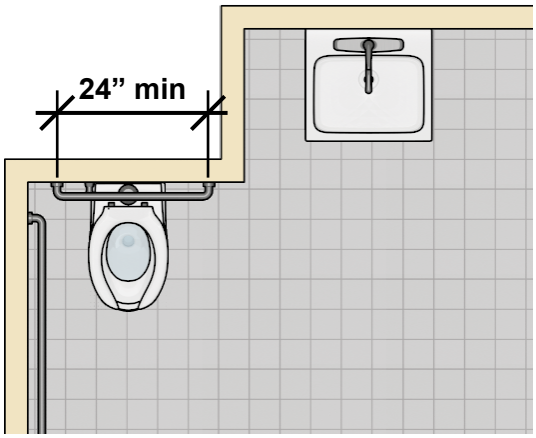

If a lavatory or other fixture is recessed next to a water closet, the rear grab bar can be 24” (instead of 36”) long minimum, centered on the unit if wall space does not allow a grab bar 36” long min. (§604.5.2).

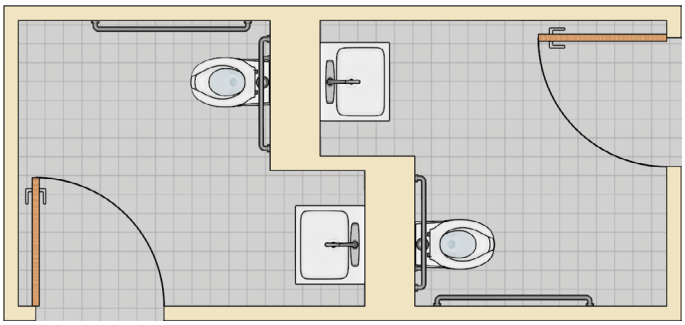

Recessed fixtures can save space where two rooms are paired.

Doors [§404]

Maneuvering clearance is required at doors based on the approach and swing. No elements can overlap door maneuvering clearances.

Push-Side Maneuvering Clearance

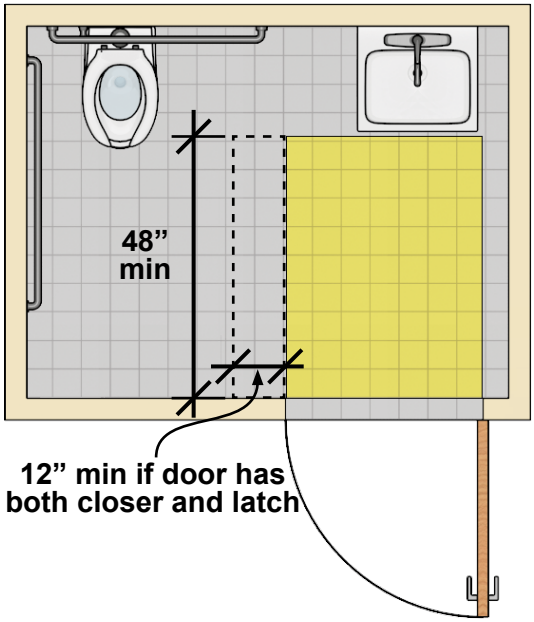

Pull-Side Maneuvering Clearance

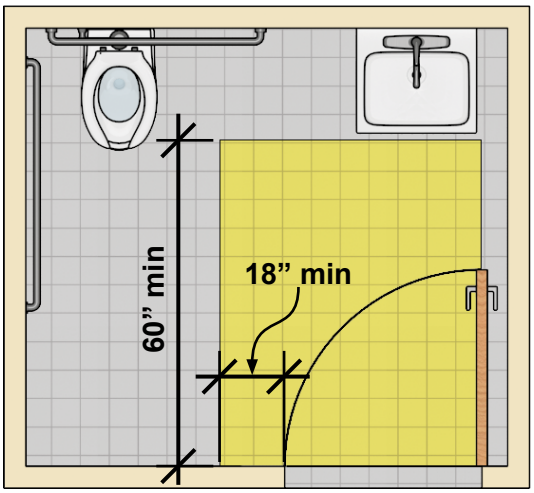

Doors can swing into fixture clearances in single-user toilet rooms where unobstructed wheelchair space is available beyond the door swing (603.2.3). This provides space to enter the room and clear the door using wheeled mobility aids.

Door Swing Outside Fixture Clearances

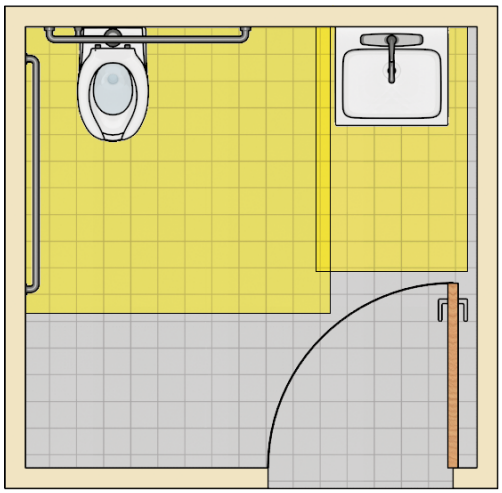

Wheelchair Space Beyond Door Swing

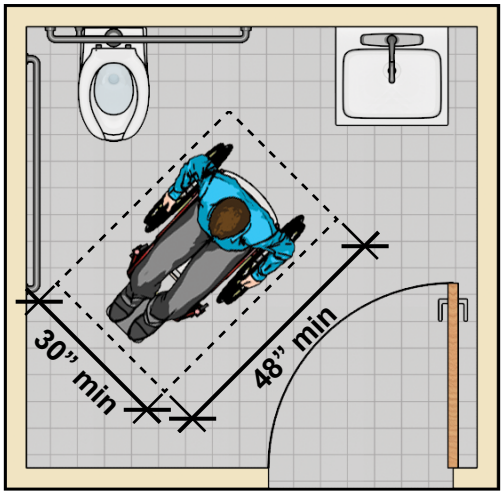

The location and orientation of the wheelchair space is not specified, but it should be easy to access upon entry into the room.

Turning Space [§304, §603.2.1]

Turning space is required in the room and can be provided as a 60” diameter circle or T-shaped space. Doors can swing into the turning space. The orientation of the T-shaped space is not specified, and it can be located for approach at any segment (i.e., the stem or either arm).

Circular Turning Space

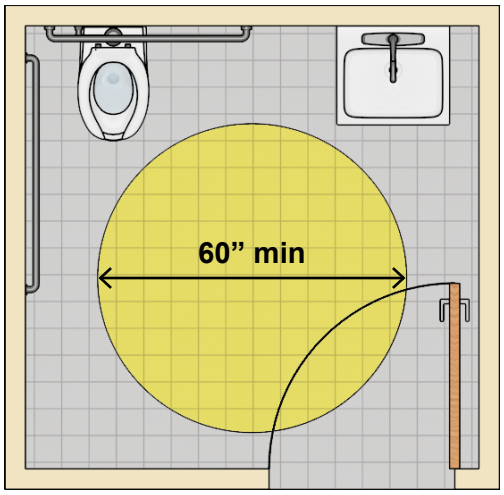

T-Shaped Turning Space

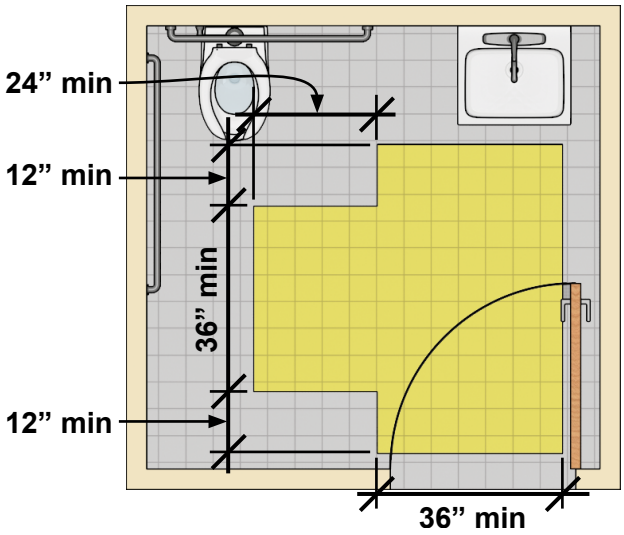

Elements with knee and toe clearance can overlap a portion of the turning space. With t-shaped space, overlap is limited to one segment of the T so that the other two remain clear for approach and backing up.

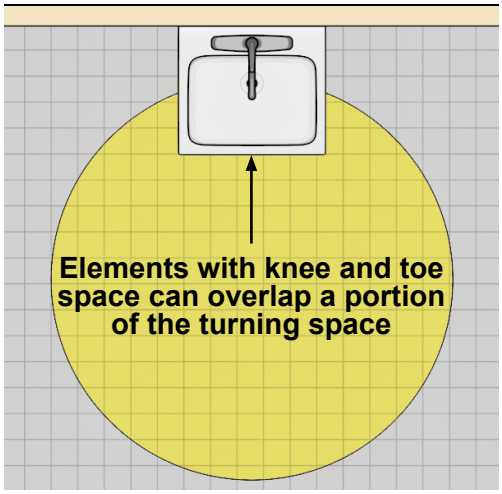

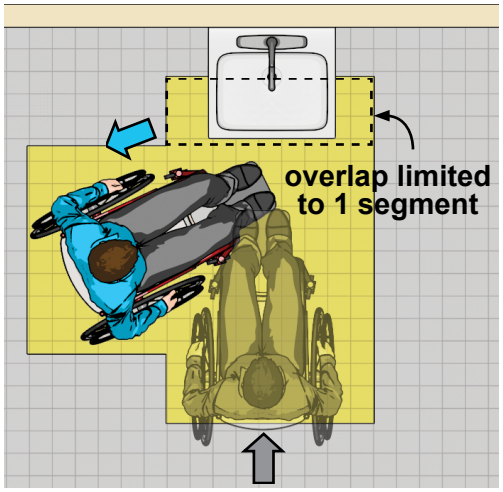

Recommendation: To provide easier access, locate elements with knee and toe space outside the turning space.

Approximate Room Dimensions

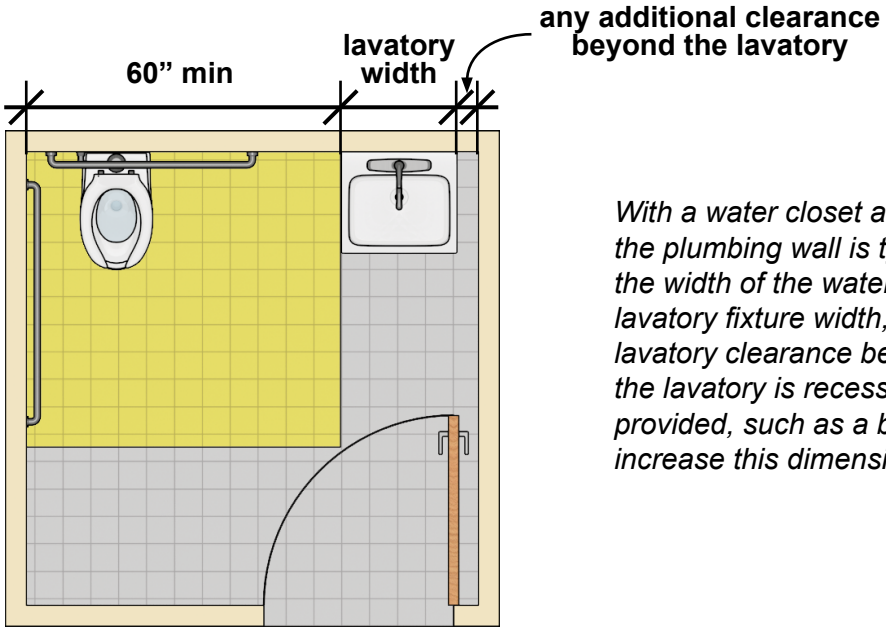

With a water closet and lavatory side-by-side, the plumbing wall is typically determined by the width of the water closet clearance, the lavatory fixture width, plus any additional lavatory clearance beyond the fixture (unless the lavatory is recessed). Other elements provided, such as a baby changing table, may increase this dimension.

In the same example, if the door is opposite the plumbing wall and swings in, the room depth will likely be determined by keeping the door swing outside fixture clearances (left). Alternatively, if there is unobstructed wheelchair space beyond the door swing, the door maneuvering clearance and the horizontal depth of the lavatory may determine the room depth (right). Turning space is typically available in the room without further increase in room size where doors swing in.

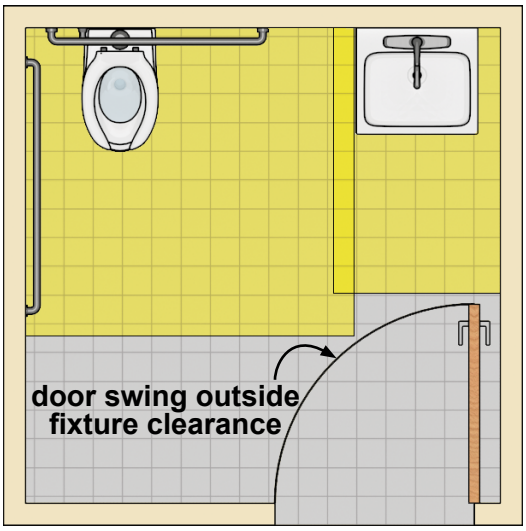

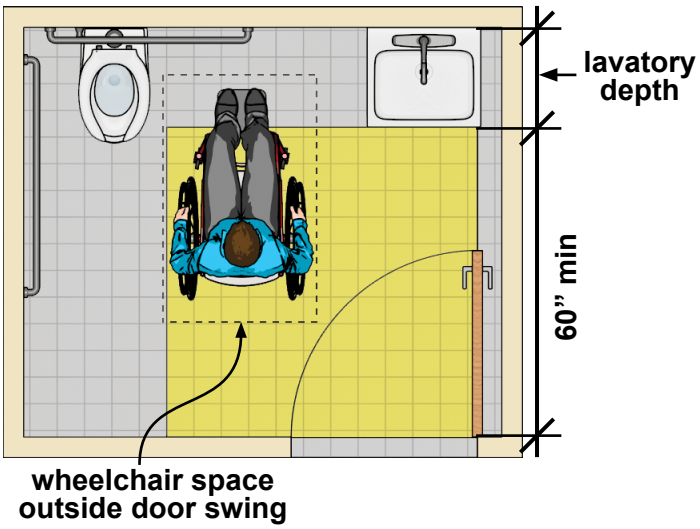

Note: Other elements provided may increase minimum room dimensions.

If the door swings out, the room depth is usually determined by the door maneuvering clearance and the horizontal depth of the lavatory. Turning space usually can be provided without further increase in this design but providing additional depth will help minimize fixture overlap of the turning space for improved access.

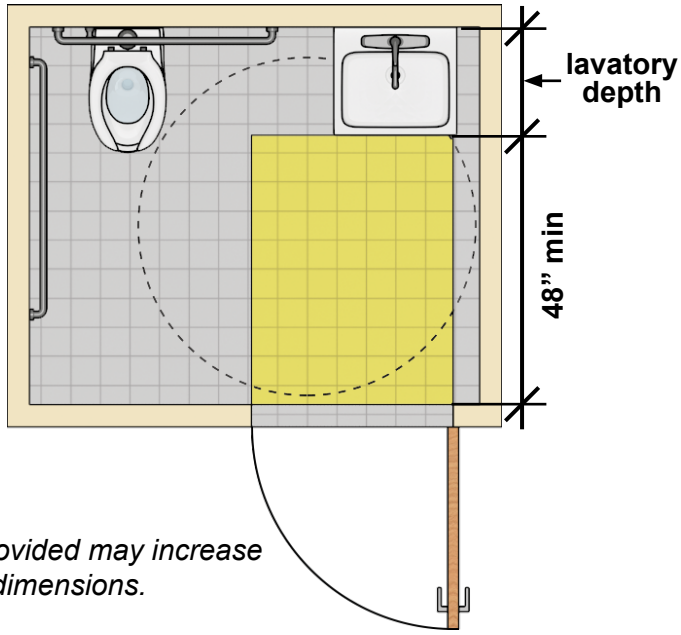

Note: Other elements provided may increase minimum room dimensions.

Example: Lavatory Opposite Water Closet

Toilet rooms can be configured in many different ways, but the same requirements apply, including those for fixtures, doors, and turning space. This example shows a door swing located outside fixture clearances (obviating the need for wheelchair space beyond the arc of the door swing) and turning space free of any overlapping elements (left). Fixtures and other elements can overlap turning space but not the door maneuvering clearance (right).

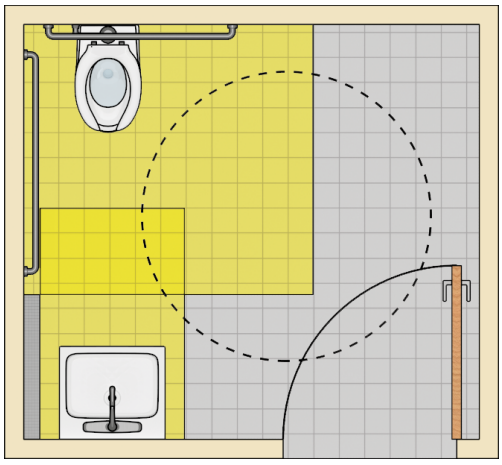

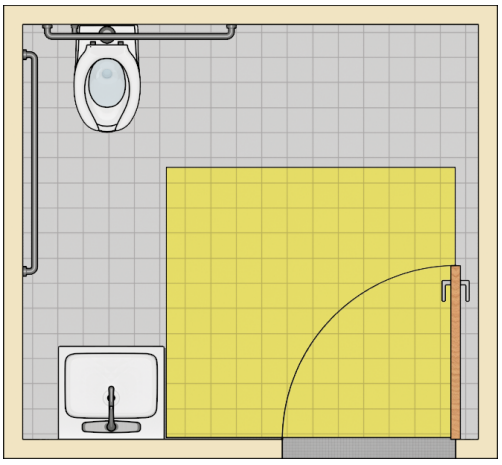

Recommendation: Toilet rooms sized to provide more space than the minimum required by the Standards improve access and enhance usability particularly for people using wheelchairs by allowing more room for maneuvering, transfers, and turning.

Dispensers and Receptacles [§205, §309], Coat Hooks and Shelves [§213.3.7, §603.4]

Dispensers, receptacles, and other operable parts, as well as shelves and coat hooks, must comply where provided.

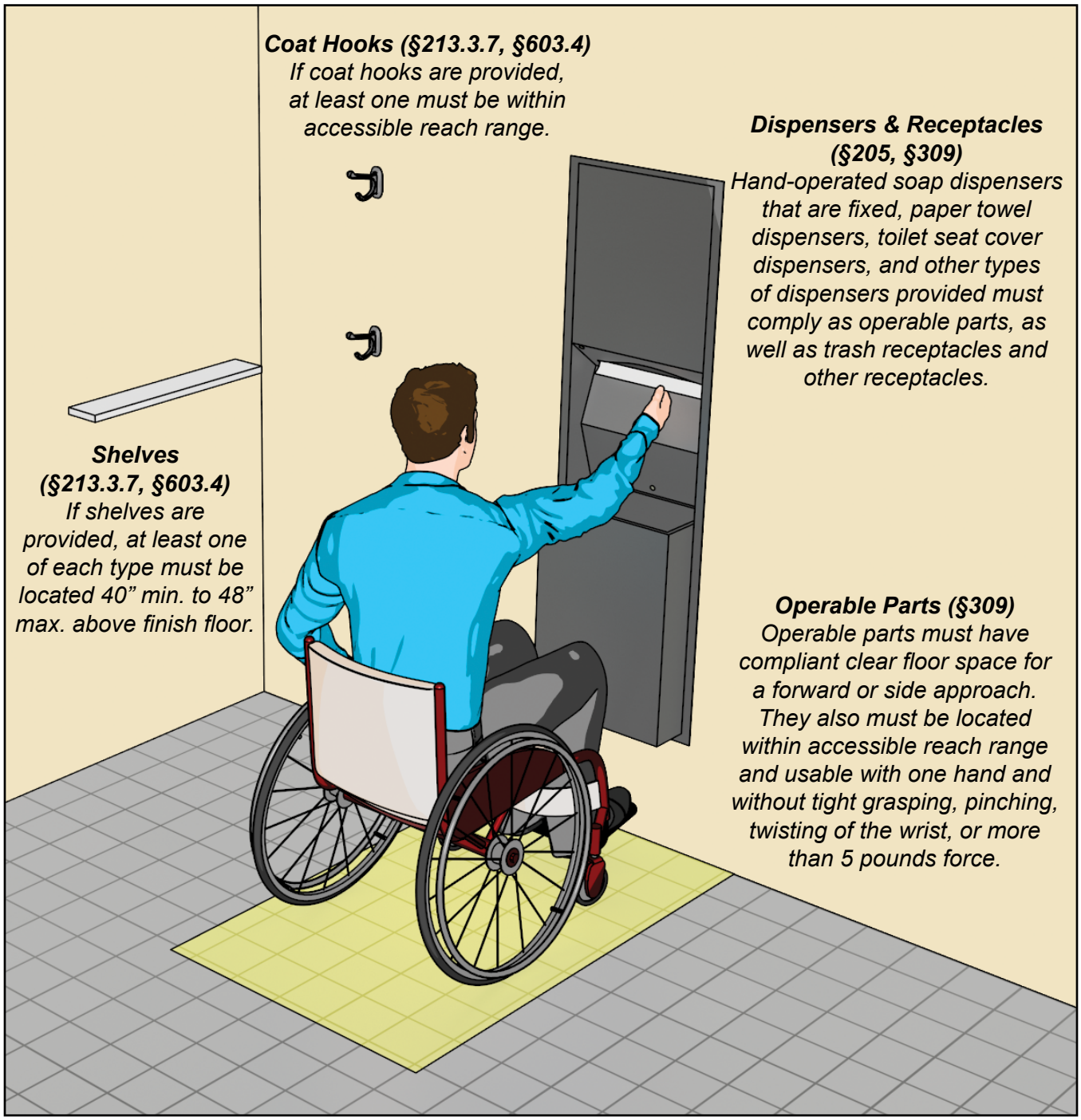

Baby Changing Tables [§226, §902]

Where baby changing tables are provided, they must comply as a work surface and, if they project into circulation paths, as protruding objects.

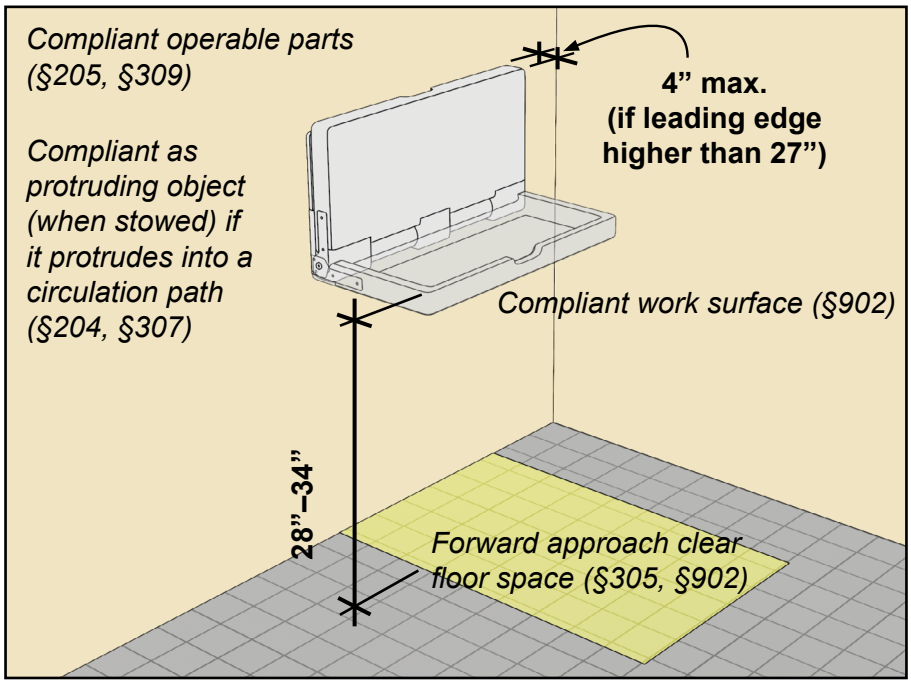

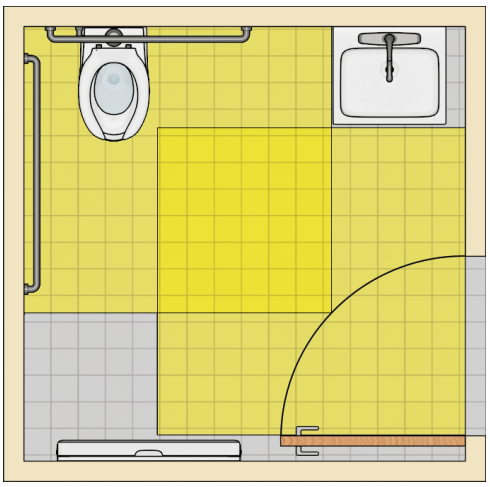

Baby changing tables cannot overlap fixture clearances or door maneuvering clearances when stowed.

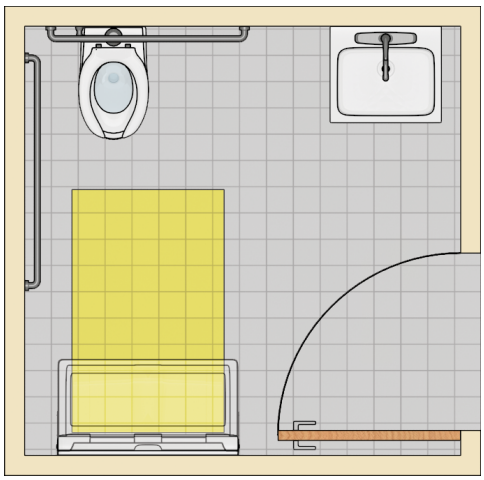

Clear space for a forward approach to the table is required. This space can overlap fixture clearances and door maneuvering clearances.

Recommendations: Locate baby changing tables so that they are easy to use by people with disabilities. Avoid placement in toilet compartments for easier access.

Private Toilet Rooms Accessed through a Private Office

Single-occupant toilet rooms accessed only through a private office and not for common or public use are permitted exceptions that allow certain access features, such as grab bars, to be provided after construction as needed. However, they still must be sized for accessibility and fully meet all space requirements. Enlarging or reconfiguring a private toilet room is not permitted by the Standards as a post-construction accommodation.

Exceptions for Private Toilet Rooms

Note: All other applicable requirements, including clearances and turning space, must be met.

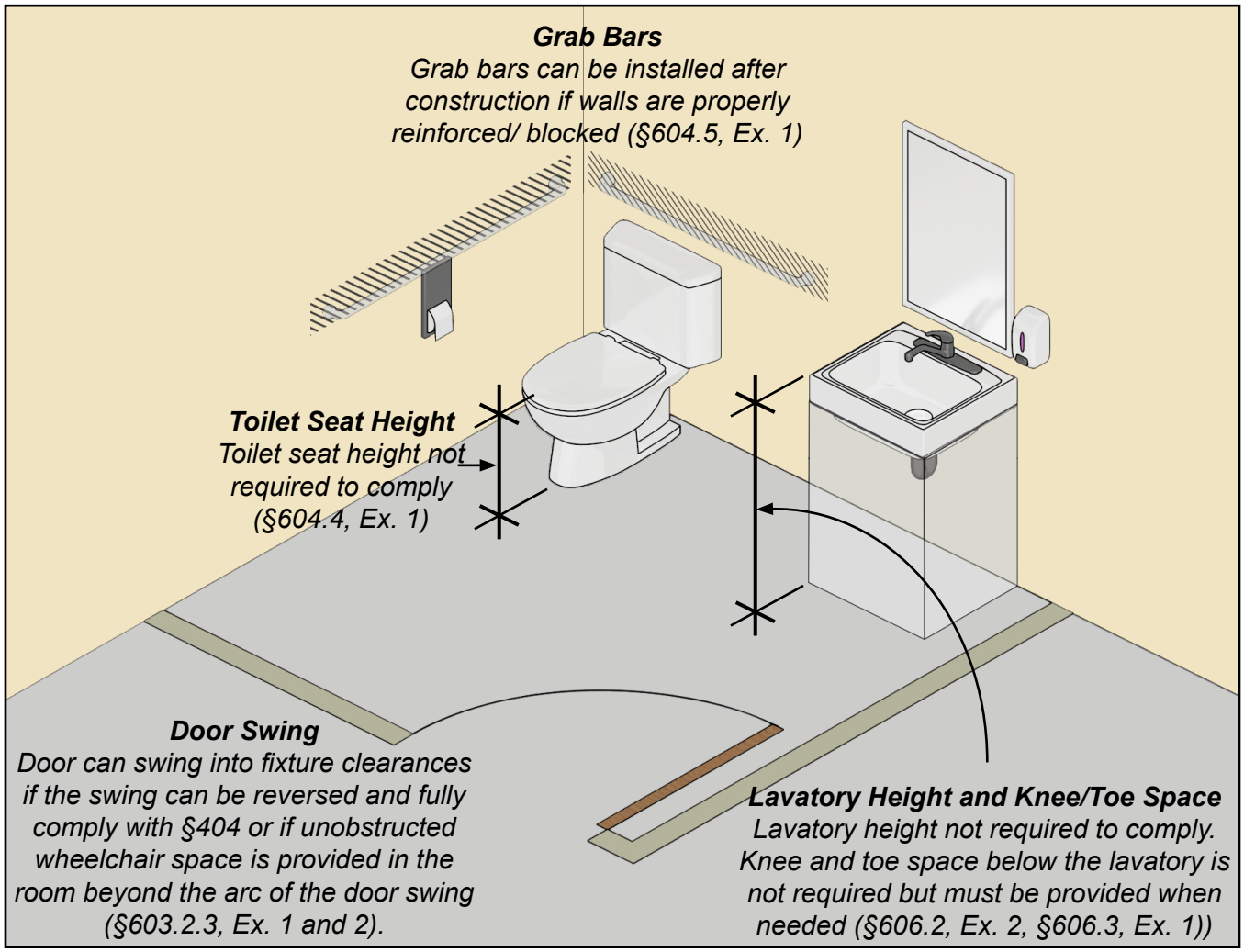

Recommendations: Cabinetry below lavatories should be readily removable with finish floor below and finished walls behind it. Verify that the applicable building or life safety codes will permit the door swing to be reversed if using the exception for doors.

Water Closets in Residential Dwelling Units

In residential dwelling units required to be mobility accessible, at least one bathroom must comply (§809.4). Accessible water closets in dwelling units are permitted several exceptions that allow some features, such as grab bars and knee and toe space below lavatories, to be provided after construction as needed if certain conditions are met. In addition, lavatories can overlap a portion of the water closet clearance if additional clearance depth is provided.

Exceptions for Water Closets in Dwelling Units

Note: All other applicable requirements, including clearances and turning space, must be met.

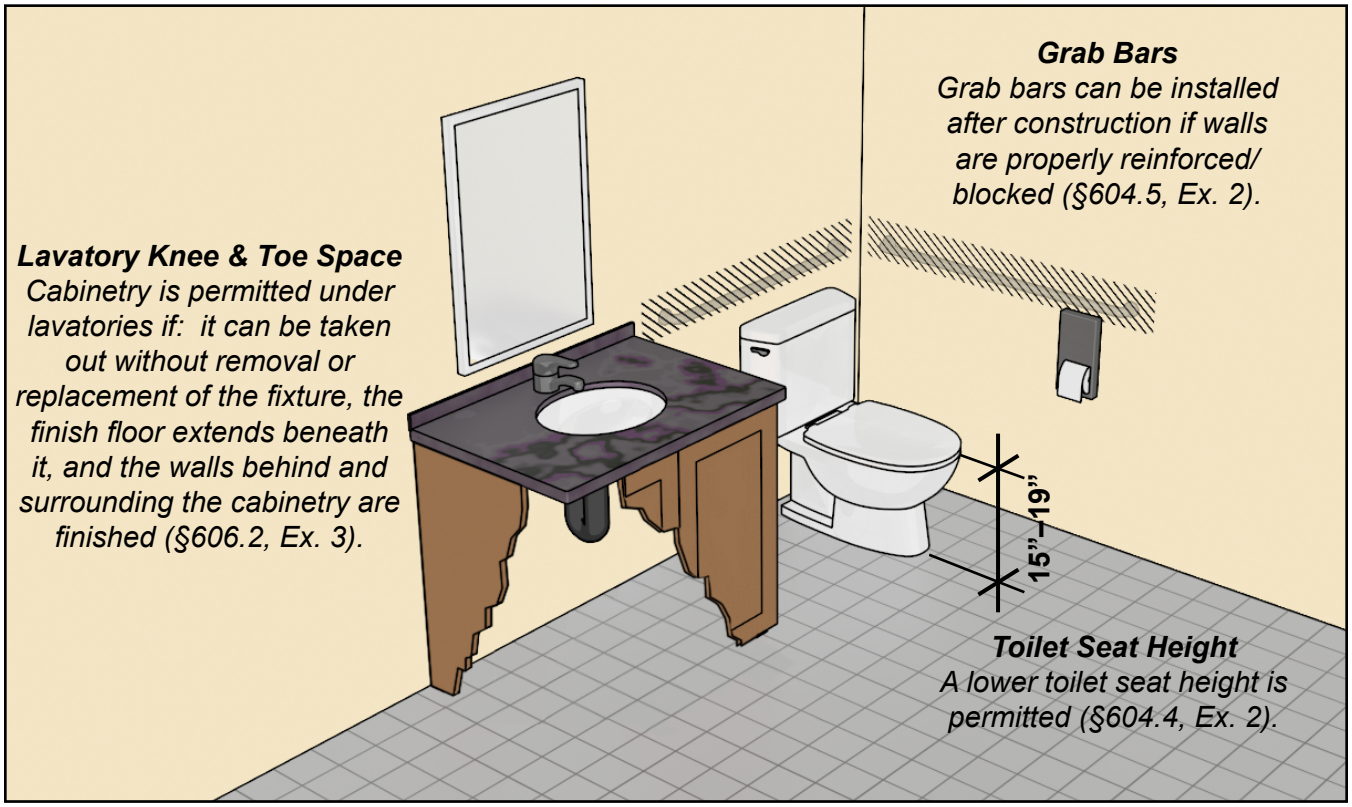

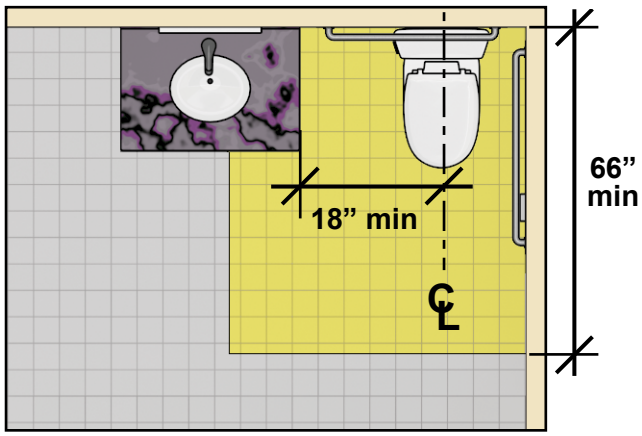

A compliant lavatory is permitted on the rear wall 18” min. from the water closet centerline if the clearance at the water closet is at least 66” (instead of 56”) deep (§604.3.2, Ex.).

Dwelling Unit Water Closet and Lavatory

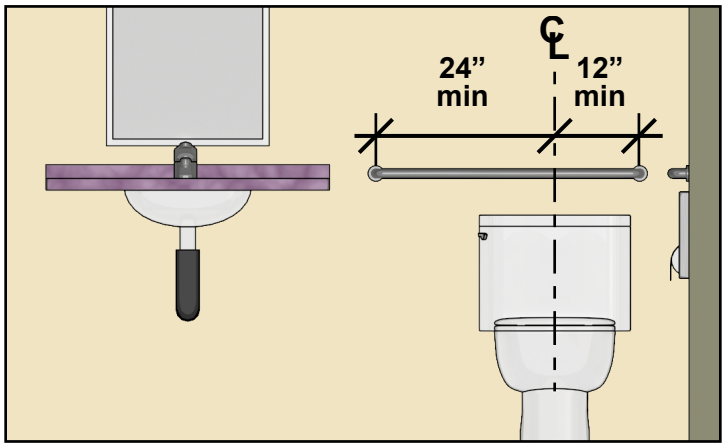

Recommendations: Keep the lavatory outside the water closet clearance so that space is available for side transfers. Lavatories that overlap the water closet clearance should be located so that the rear grab bar does not overlap the lavatory or counter.

Water Closets and Toilet Compartments for Children’s Use [§604.1, §604.8, §604.9]

Specifications based on children’s dimensions can be followed when water closets and toilet compartments are designed primarily for use by children ages 12 and younger. Structured as exceptions, these provisions are optional and serve as alternatives to adult-based dimensions. Under the Standards, the decision to design a toilet room for children is left to other building requirements or regulations, good practice, client preference, or other factors. When a toilet room or compartment is designed for children, all pertinent alternate specifications for toilets, compartments, grab bars, and dispensers must be applied.

Recommendations: Where a toilet room serves both adults and children, provide one wheelchair accessible toilet for adults and a second one for children (only one toilet or compartment is required to be accessible in a toilet room). Unisex or “family” restrooms that are provided in addition to multi-user toilet rooms are beneficial to parents with children of the opposite sex.

The Standards provide non-mandatory guidance on specifications according to the age group served that reflect the differences in size, stature, and reach ranges of children ages 3 through 12. The chosen specifications should correspond to the primary user group and be consistent within an age bracket. If the planned user group spans more than one age group, one can select specifications that align on the borderline between the two groups.

Water Closet for Children 12 and Younger

Note: All other requirements for children's water closets and toilet compartments are consistent with those based on adult dimensions.

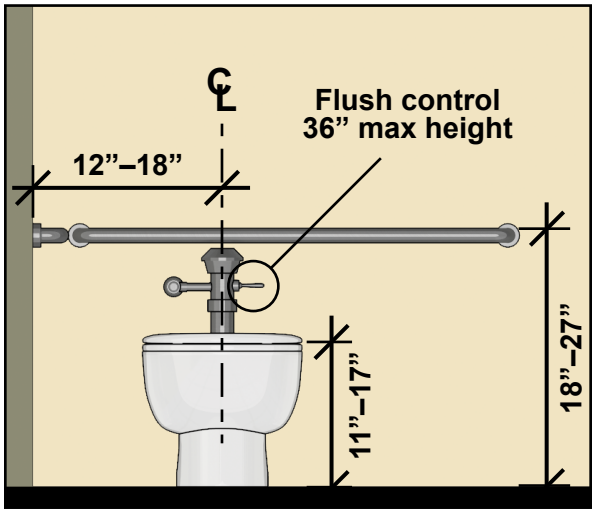

Water closet centerline, seat height, and grab bar height

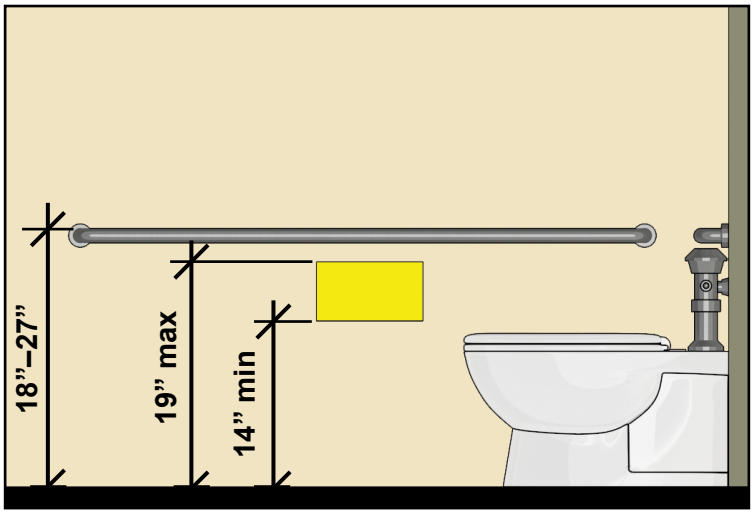

Grab bar and toilet paper dispenser height

The rear grab bar can be shifted to the open side of the water closet or split where it would conflict with the location of flush controls required by the applicable code (§604.5.2, Ex. 2).

Advisory (Non-Mandatory) Specifications by Age Group			
	3 & 4	**5 through 8**	**9 through 12**
Water Closet Centerline	12"	12" – 15"	15" – 18"
Toilet Seat Height	11" – 12"	12" – 15"	15" – 17"
Grab Bar Height	18" – 20"	20" – 25"	25" – 27"
Dispenser Height	14"	14" – 17"	17" – 19"

Recommendations: The Standards provide advisory (non-mandatory) guidance on the water closet height and centerline and the height of grab bars and toilet paper dispensers according to three age groups (above). The chosen specifications should correspond to the age of the primary user group. The specifications of one age group should be applied consistently in the installation of a water closet and related elements.

Portable Toilet Units

Where portable single user toilet units are provided, including at temporary events, access is required to at least 5% in each cluster (213.2, Ex. 3). Compliant units must be labeled by the International Symbol of Accessibility (ISA). Portable units must meet all requirements for toilet rooms that apply, including fixture clearances, turning space, and door maneuvering clearances.

An accessible route and entrance are required to serve portable units. Ramps necessary for changes in level must fully comply, and entrance landings must be sized to accommodate door maneuvering clearances and ramp landings.

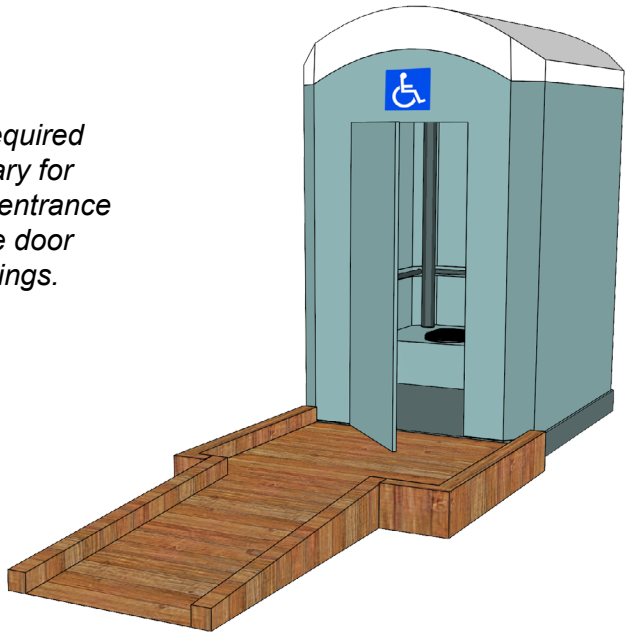

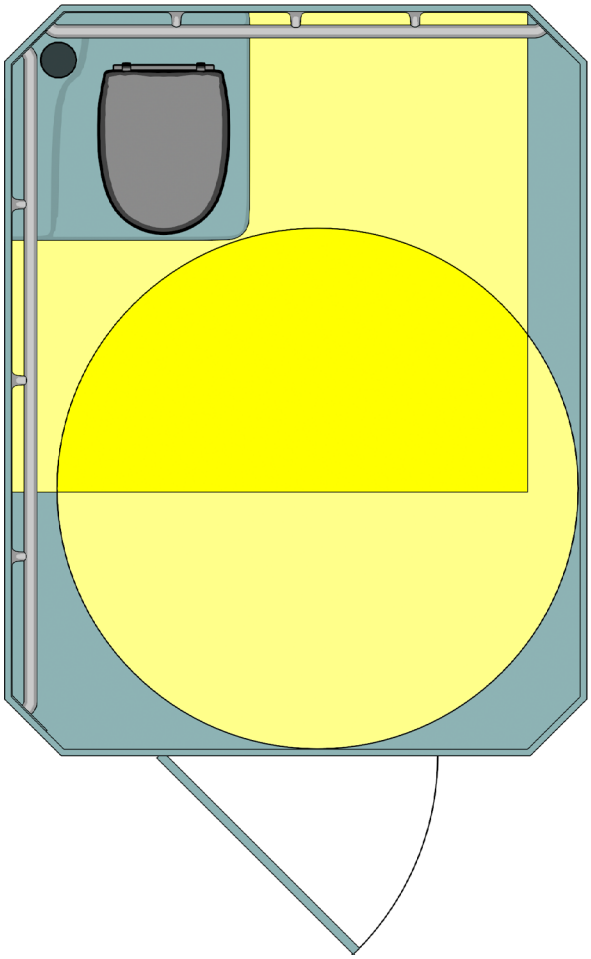

Compliance with all other applicable provisions for water closets, including those for grab bars and clearance, is required. Other requirements for toilet rooms, such as door maneuvering clearance (not shown) and turning space also apply.

Multi-User Toilet Rooms

The Standards address toilet compartments and urinals which apply in addition to criteria for toilets, lavatories, mirrors, dispensers, shelves, and other elements provided.

Components of Multi-User Toilet Rooms

At least one wheelchair accessible toilet compartment (§213.3.1)

At least one compliant urinal where more than one urinal is provided (§213.3.3)

At least one compliant lavatory (not located in a toilet compartment) and at least one compliant mirror, where provided (§213.3.4 and §213.3.5)

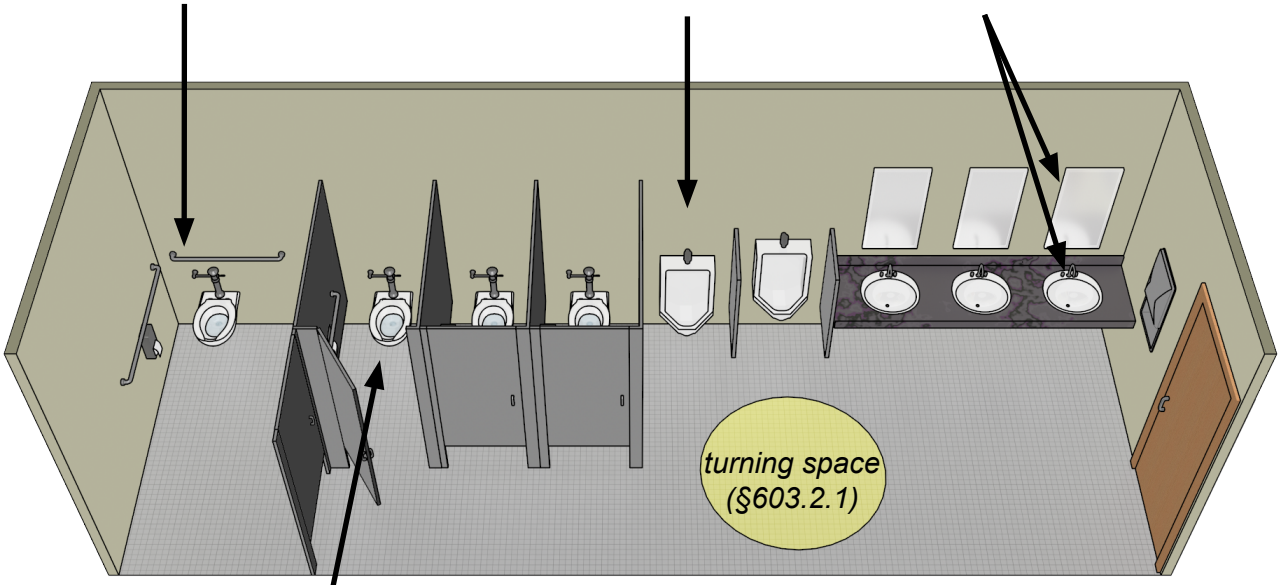

At least one ambulatory accessible toilet compartment in restrooms with at least 6 toilet compartments or where the combined total of toilets and urinals is at least 6 fixtures (§213.3.1)

Dispensers, receptacles, and other operable parts must comply where provided (§205)

Doors, including toilet compartment doors, cannot swing into the clear floor space required at plumbing fixtures (§603.2.3), but they can swing into turning space.

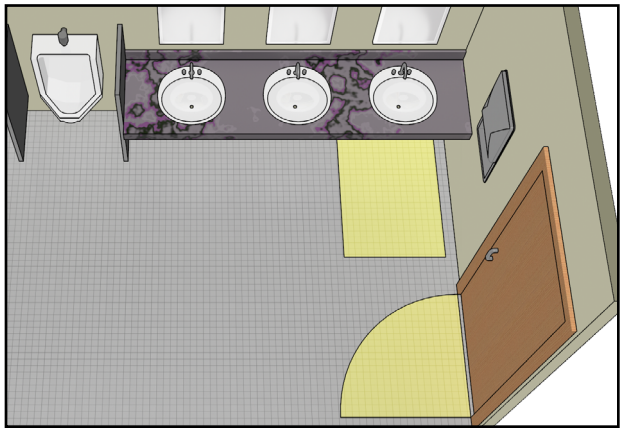

Wheelchair Accessible Toilet Compartments [§213.3.1, §604.8]

At least one toilet compartment must be wheelchair accessible where toilet compartments are provided.

Compliant coat hooks and shelves where they are provided in other toilet compartments (§213.3.7, 604.8.3)

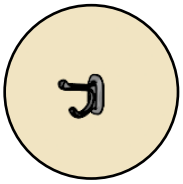

Compliant water closet with additional clear floor space required if fixture is floor mounted (59" instead of 56" deep) (§604.8.1.1)

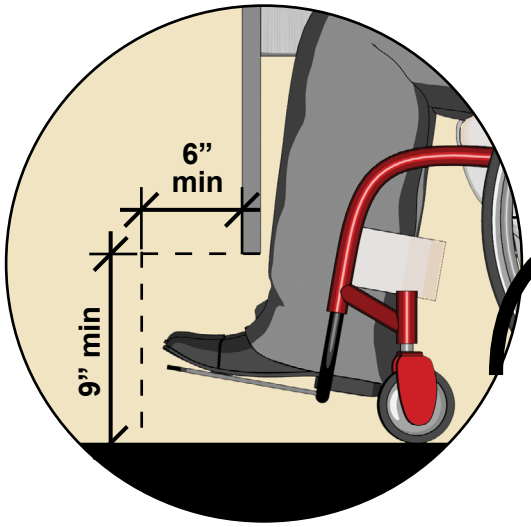

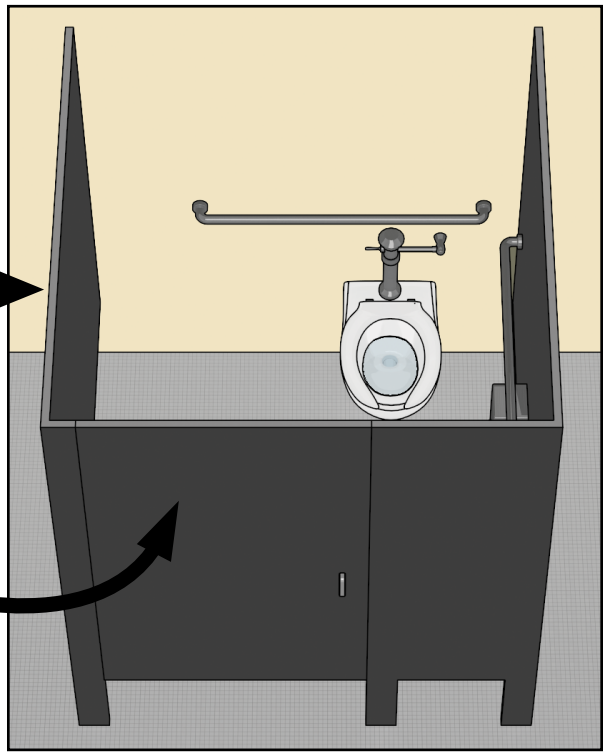

Toe clearance below the front and one side partition unless the compartment is enlarged to include toe space (§604.8.1.4) (partition vertical supports are permitted within this clearance)

A compliant door that is self-closing (§604.8.1.2)

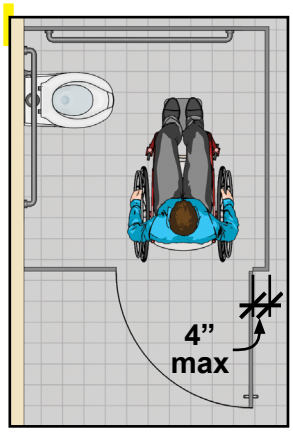

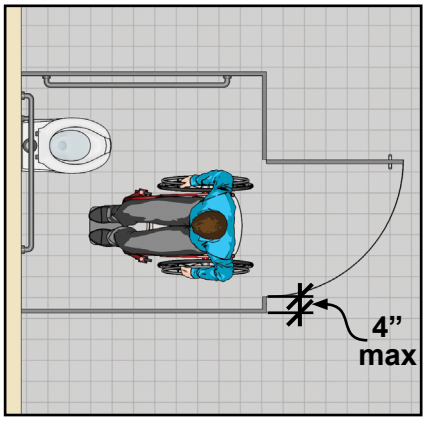

Compartment doors must be offset from the water closet in either the front or the side partition so that there is space to enter the compartment. Doors can be hinged on the left or right side of the opening.

Compartment Doors [§404, §604.8.1.2]

Compartment doors must meet applicable requirements for doors, including the clear width (32” min.), hardware, and opening force (5 lbs. max.).

Door must be self-closing (gravity or spring hinges are typically used). The min. closing time for spring hinges is 1.5 seconds measured from a 70° open position to the closed position.

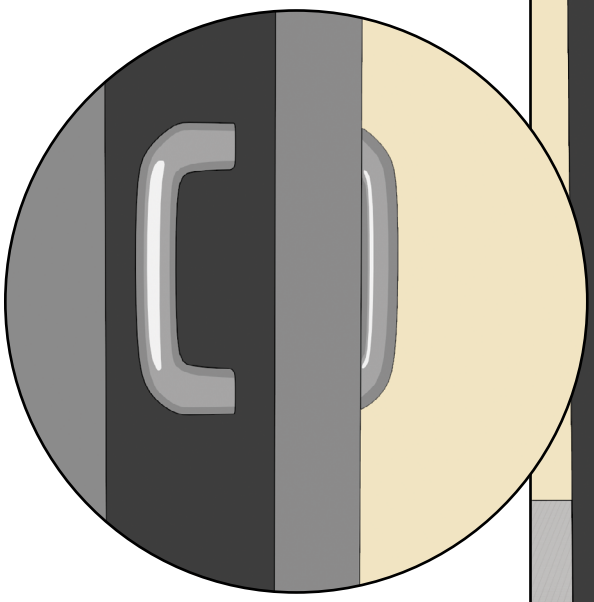

Door pulls are required on both sides near the latch, 34” – 48” above the finish floor.

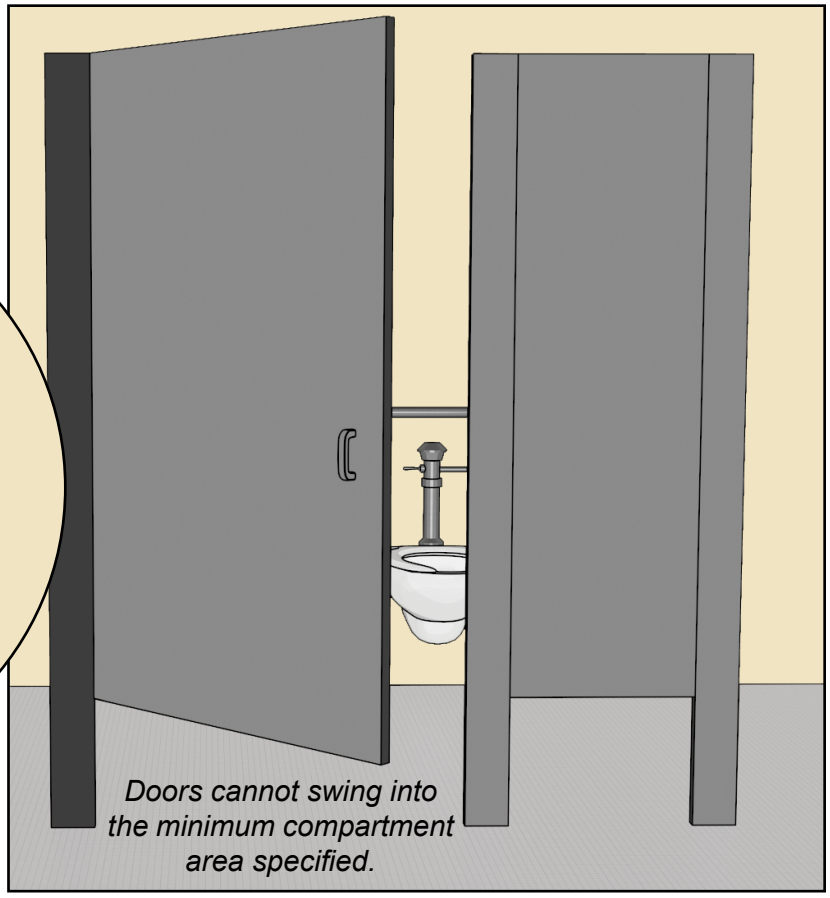

Doors cannot swing into the minimum compartment area specified.

Door pulls, latches and other hardware must comply as operable parts and be usable with one hand and not require tight grasping, pinching, twisting of the wrist, or more than 5 pounds force. Hardware that is usable with a loose grip or closed fist will accommodate a wider range of users. Latches with small parts that must be manipulated can be difficult to use and will not comply if pinching is necessary.

Recommendations: Pulls should provide sufficient knuckle clearance (1½” minimum) to facilitate gripping. Avoid hardware, including latches, that requires hand or finger dexterity, fine motor movement, or simultaneous actions.

Compartment doors must meet maneuvering clearance requirements, but a reduced clearance is specified for compartment doors providing a latch approach. Doors can be hinged on either side.

Recommendation: Hinging doors to provide a latch approach instead of a hinge approach will provide easier access and require less maneuvering clearance.

Latch Approach Clearance

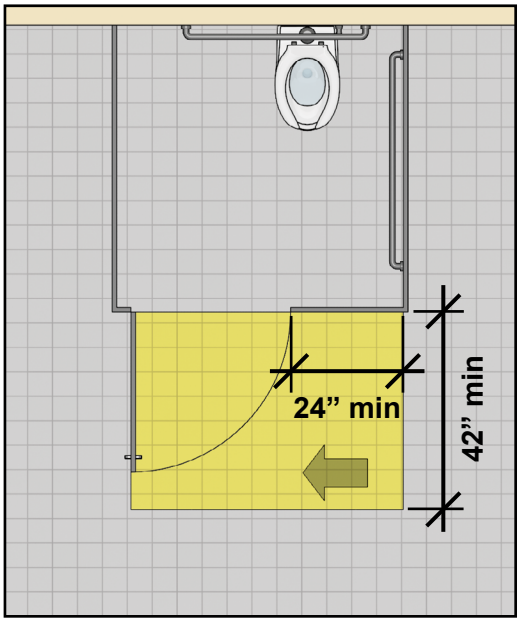

Forward Approach Clearance

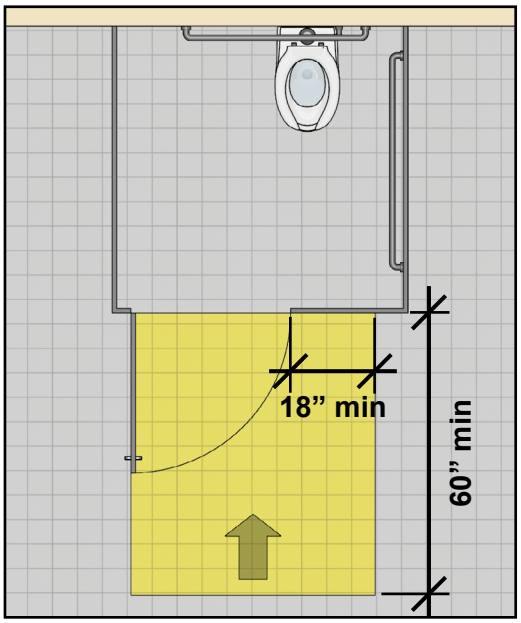

Hinge Approach Clearance

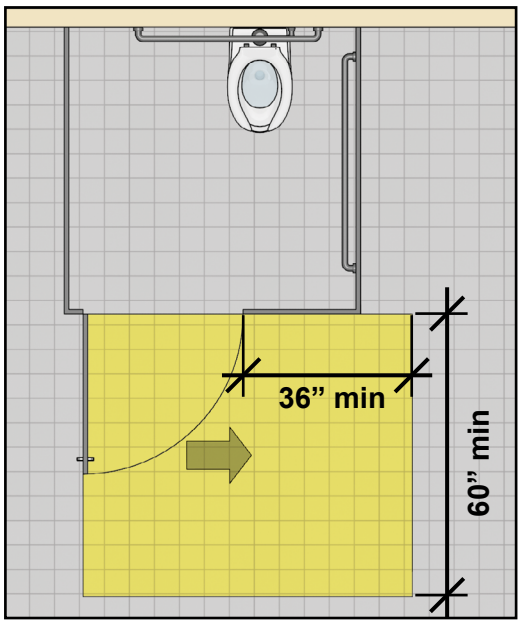

Alternative Hinge Approach Clearance

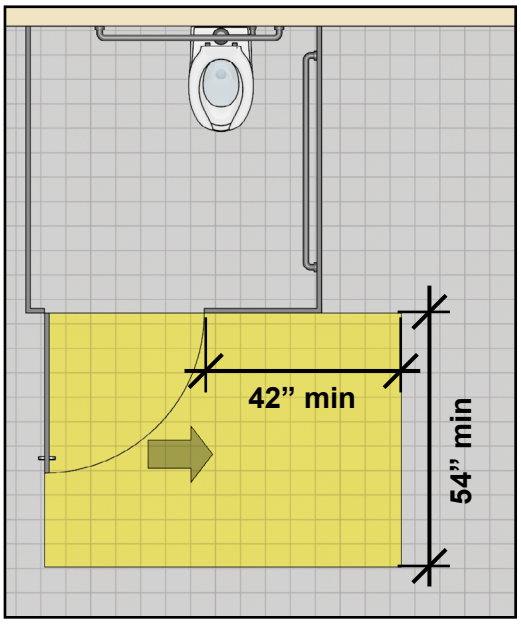

The required size of compartments provides the minimum space needed to enter, approach and transfer to water closets, and exit. As with water closets generally, the only elements that can overlap the minimum compartment/water closet clearance are: the water closet, associated grab bars, dispensers, coat hooks, shelves, and sanitary napkin disposal units. Other elements and fixtures, including baby changing tables in the stowed position, cannot overlap this clearance. If an additional plumbing fixture, such as a lavatory, is provided in a compartment, the compartment must meet the requirements for single-user toilet rooms in §603.

Toilet compartments are typically enclosed by partitions. Full-height partitions and door assemblies are not prohibited but will require a larger compartment because toe clearance below partitions is not available.

Recommendations: The dimensions specified represent the minimum necessary for access. Providing additional space within compartments will enhance usability.

Compartment with Toe Clearance Below Partitions

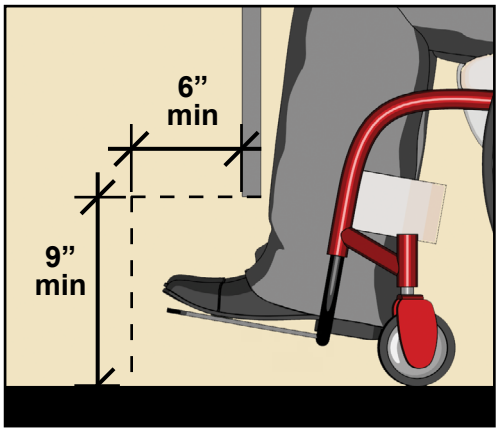

56” min
wall-mounted water closet
59” min
floor-mounted water closet

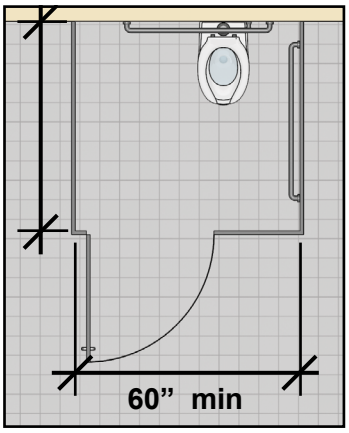

Compartment without Toe Clearance Below Partitions

No toe clearance at front partition:
greater than 62”
wall-mounted water closet
greater than 65”
floor-mounted water closet

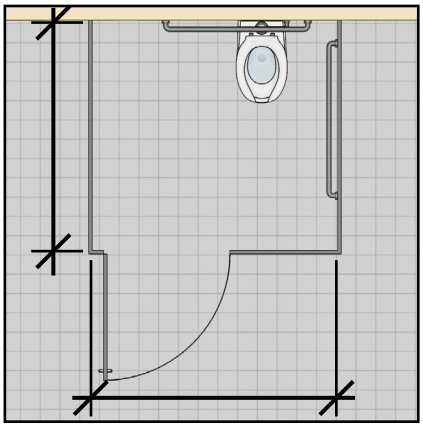

No toe clearance at side partition: greater than 66”

Toilet Compartments Designed for Children's Use [§604.8.1]

Toilet compartments designed for use by children 12 and younger must be slightly larger (59" wide for wall- or floor-mounted water closets) because children's maneuvering skills are generally less refined. The toe clearance must be at least 12" high to accommodate footrests that are higher above the floor. As with adult-sized compartments, additional space is required if toe clearance is not available below partitions.

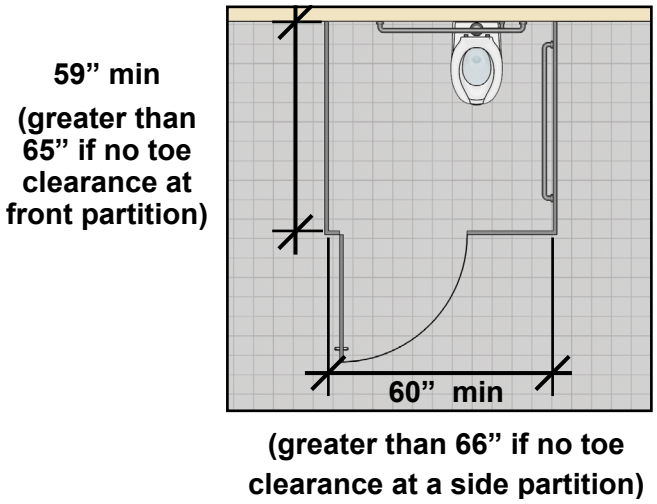

End-of-Row Toilet Compartment

Wheelchair accessible toilet compartments located at the end of the row can provide more room by incorporating dead-end aisle space. The door can swing in if it clears the minimum compartment area. The compartment door can be located in the side partition that is closer to the water closet when the door opening is beyond the minimum depth of the compartment area.

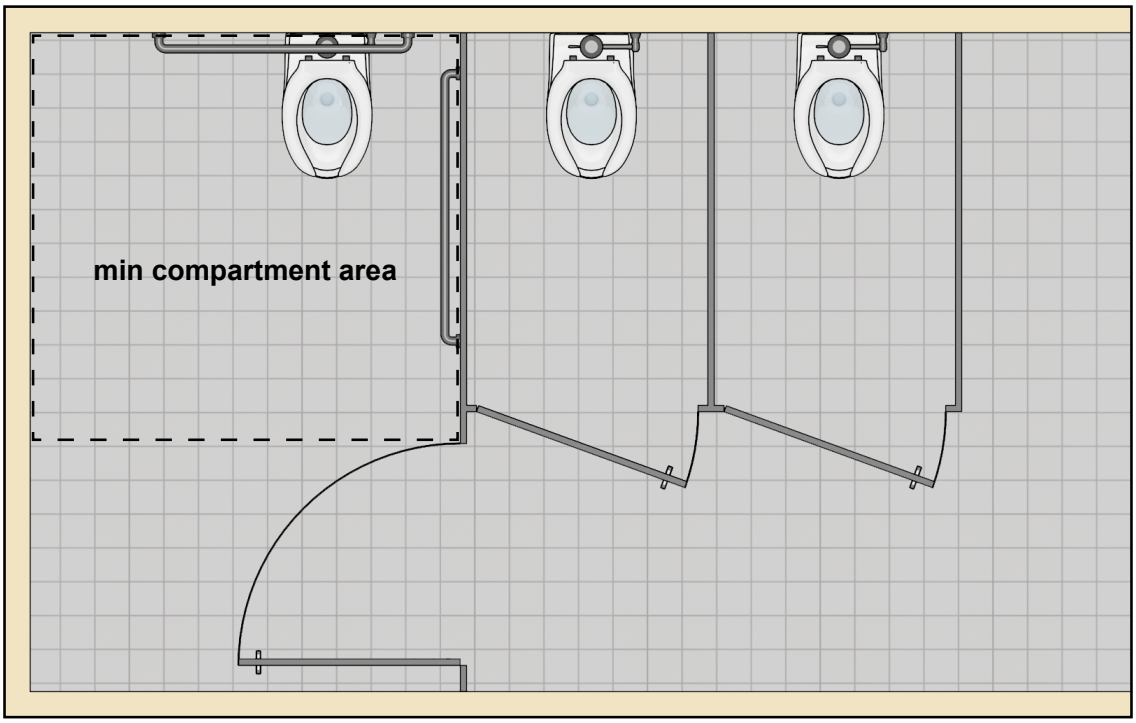

Toilet Compartment with a Lavatory [§603, §604.8]

No other fixture besides the toilet can be located in the minimum space required for the compartment. If a lavatory or another plumbing fixture is located in a compartment, the compartment must meet requirements for toilet rooms, including turning space. Another compliant lavatory is required outside the compartment.

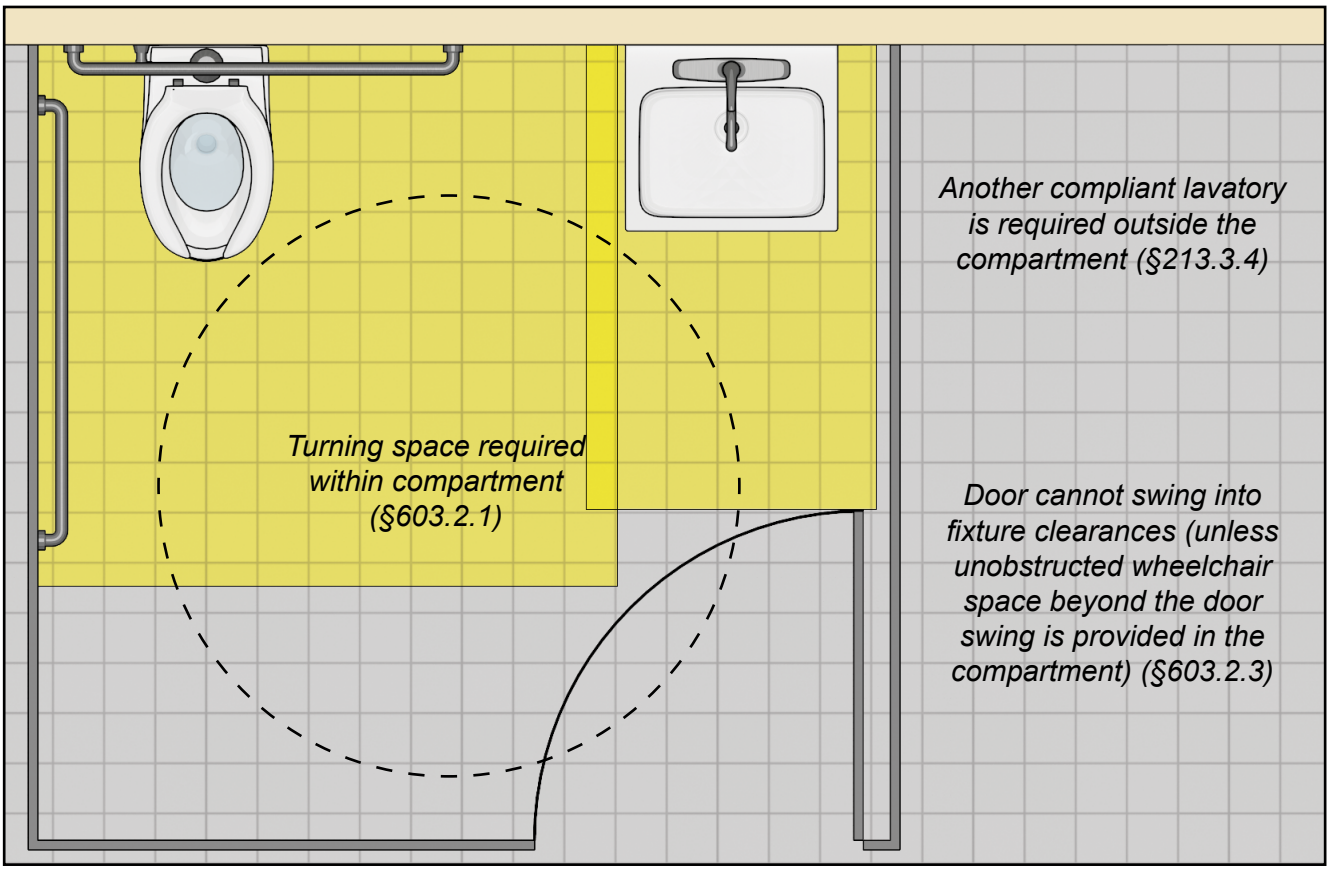

Ambulatory Accessible Toilet Compartment [§213.3.1, §604.8]

Ambulatory accessible toilet compartments provide parallel grab bars and benefit people who use crutches, canes, walkers and similar devices or who need support in sitting or standing. They do not accommodate wheelchairs or scooters and are required in addition to the wheelchair accessible compartment in toilet rooms with six or more toilet compartments or where the combined total of toilets and urinals is six or more. They are sized so that both grab bars are within reach. Grab bars must meet specifications for size, location, and securement.

The compartment width is specified so that both grab bars are simultaneously within reach.

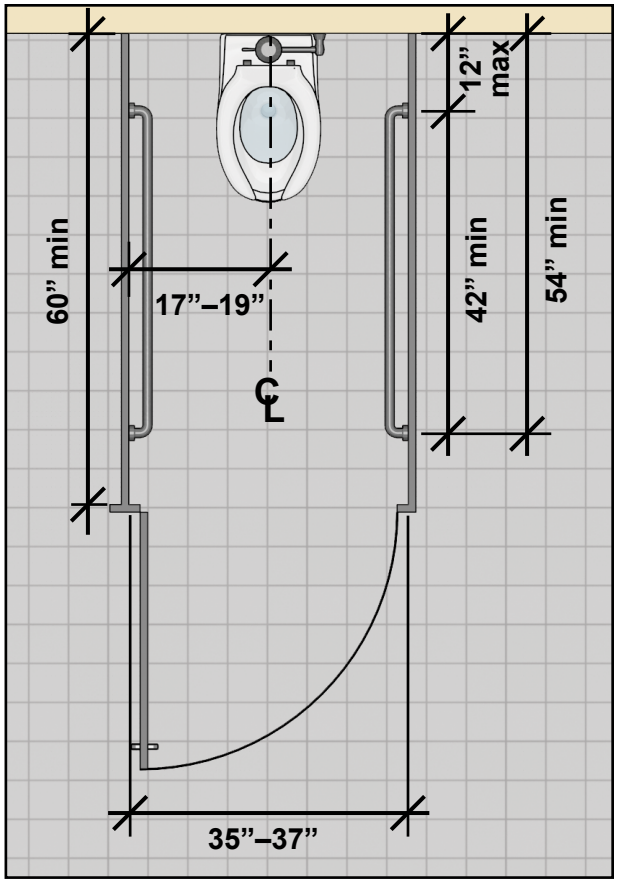

Like wheelchair accessible compartments, doors must fully comply and be self-closing, have a pull on both sides near the latch, and cannot swing into the required compartment area. All other applicable door criteria, including maneuvering clearances, must be met.

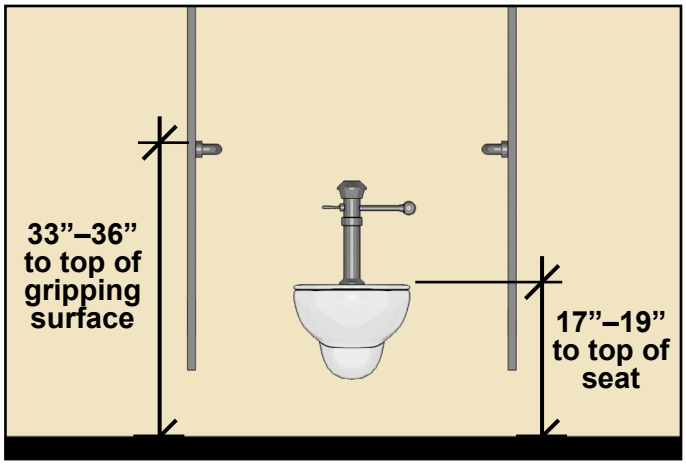

Water closets must comply, including flush controls which must meet criteria for operable parts if hand-operated. Seats cannot be sprung to return to lifted position. Requirements for toilet paper dispensers, coat hooks, and shelves also apply.

Urinals [§213.3.3, §605]

At least one urinal must comply where two or more urinals are provided in a toilet room. Specifications address rim height, depth, flush controls, and clear floor space. Accessible urinals must be either wall hung or stall type. Flush controls must be automatic or, if hand operated, compliant as operable parts and located within accessible reach range (§309).

Wall Hung Urinal

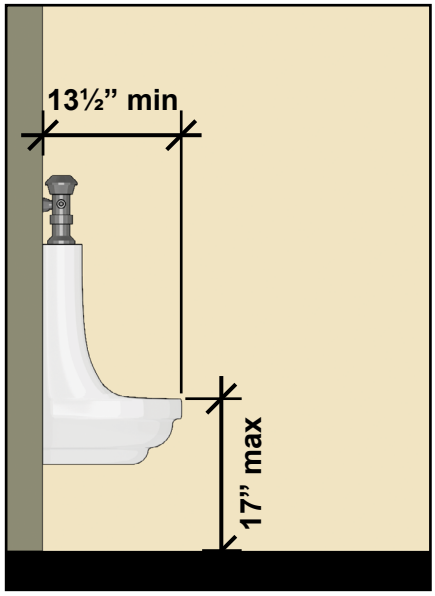

Stall Type Urinal

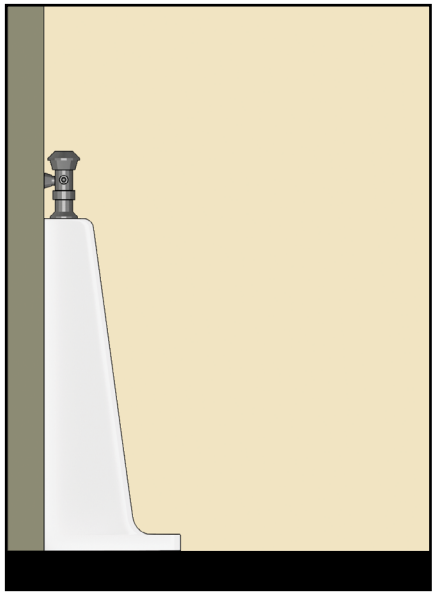

Clear floor space for a forward approach is required. Partitions or privacy panels cannot obstruct or reduce the minimum clearance. If partitions or panels obstruct both sides of the clear floor space for more than 24”, the clear floor space must be at least 36” wide instead of 30” wide.

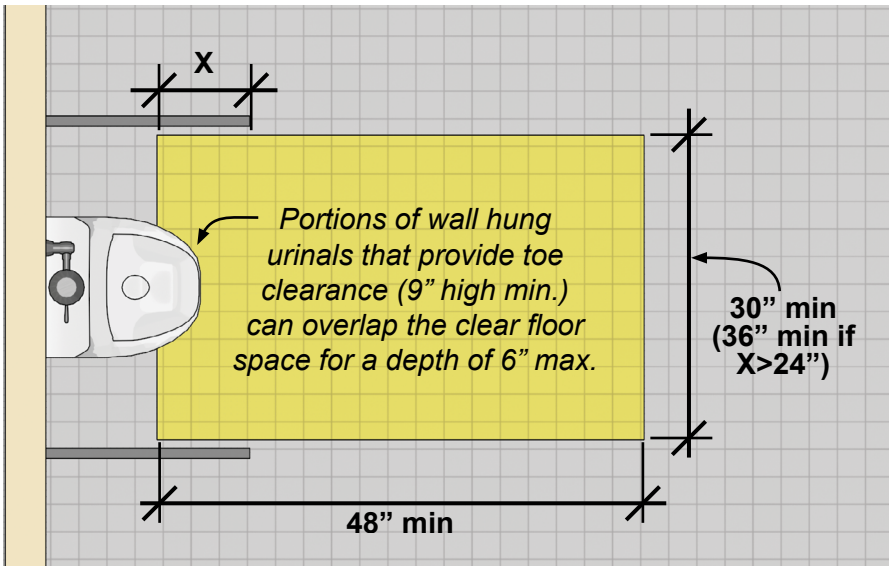

Toilet Room Signs [§216 and §703]

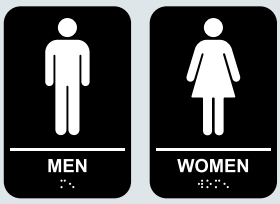

Where provided, signs that identify permanent rooms and spaces, including toilet rooms, must have raised characters and braille and meet criteria for visual access (§216.2). Visual content and tactile content can be provided on separate signs.

If pictograms are provided to identify toilet rooms (i.e., symbols for men's, women's, and unisex restrooms), they must be on a field at least 6" high, include the verbal equivalent below in raised characters and braille, and meet finish and contrast specifications (§703.6). These pictogram requirements do not apply to any informational pictograms that are also provided on the sign, including the International Symbol of Accessibility (ISA). If not all toilet rooms are accessible, those that comply must be labelled by the ISA. The ISA can be included on the toilet room sign or be provided separately.

Where existing toilet rooms in an alteration do not comply, signs with the ISA must be provided indicating the location of the nearest accessible toilet room, and those that comply must be labeled by the ISA as well (§216.8). The content of directional signs is not specified.

Common Questions

Toilet Rooms

Are toilet rooms that serve employees but not the public required to comply?

Yes. Public and common use toilet rooms, including those used exclusively by employees, must comply. Private toilet rooms for a single occupant accessed only through a private office are permitted limited exceptions for certain access features, such as the later installation of grab bars if walls have blocking or are reinforced.

Can access be provided to a unisex restroom instead of to men's and women's rooms?

If men's and women's rooms are provided, they must be accessible even if a unisex toilet room is also provided. However, in alterations when it is technically infeasible to make existing men's and women's rooms comply, an accessible unisex toilet room can be provided instead if it is located on the same floor and in the same area as the men's and women's rooms (§213.2, Ex. 1).

Is access required to a unisex family or gender-neutral toilet room that is provided in addition to accessible men's and women's rooms?

Yes. Unisex toilet rooms must be accessible, including where they are provided in addition to multi-user toilet rooms. Where multiple single-user toilet rooms are clustered at one location, no more than half for each use are required to comply (§213.2, Ex. 4).

How does the exception for clustered single user toilet rooms of the same type (no more than 50% at each cluster) apply when there is an odd number of toilet rooms?

When there is an odd number of single user toilet rooms of the same type in a cluster, the number of accessible toilet rooms can be rounded up or down. Rounding up is recommended for better access and is otherwise required when fractions or remainders result in determining the number of facilities or elements required to comply (§104.2). However, rounding down is permitted in this instance because the exception for clustered single user toilet rooms states that "no more than 50 percent of the single user toilet rooms for each use at each cluster shall be required to comply" (§213.2, Ex. 4).

Is there a maximum distance or separation that applies to toilet rooms within the same cluster?

No maximum distance is specified, but clustered single user toilet rooms are those that are next to, or close to, one another.

What is the impact of providing two unisex toilet rooms instead of a designated single-user men's room and a designated single-user women's room?

If two unisex restrooms of the same type are clustered in one location, only one of the two is required to comply under the Standards (§213.2). If a single-user men's room and a single-user women's room are provided, both must comply even if clustered since they are different types.

Can toilet rooms be designed for assisted instead of independent access?

The Standards address independent accessibility and do not contain requirements for spaces and elements designed for assisted use. In medical care facilities, features for assisted use that conflict with the Standards can be provided in those toilet or bathing rooms serving patient bedrooms that are not required to comply with the Standards. Otherwise, any departure from the Standards, including those related to assisted use, must be based on the provision for "equivalent facilitation" (§103) which permits alternatives to specified requirements that provide substantially equivalent or greater accessibility and usability.

In facilities that are exempt from the requirement for vertical access between stories, are toilet rooms required to comply on stories not connected by an accessible route?

Yes. In facilities that are not required to provide an accessible route between stories based on the story count or square footage per floor (§206.2.3, Ex. 1 or 2), all other provisions in the Standards, including those for toilet rooms, still apply to levels and stories not connected by an accessible route. In addition, if a toilet room is provided on an inaccessible story of such a facility, a toilet room also must be provided on an accessible story so that it is connected to an accessible entrance by an accessible route (§213.1).

What is the minimum size of toilet rooms?

The standards do not specify the minimum size of toilet rooms. The required size of a toilet room is determined by room layout, the number and configuration of fixtures provided, required clearances, the presence of baby changing tables and other amenities, turning space, door maneuvering clearances, and other factors and requirements.

Can doors swing into the turning space and fixture clearances?

Doors can swing into the turning space. They cannot swing into the clearance required at plumbing fixtures, except in single user toilet rooms where clear floor space 30” minimum by 48” minimum is provided in the room beyond the arc of the door swing (§603.2.3, Ex. 2). In addition, doors can swing into fixture clearances at single-occupant toilet rooms accessed only through a private office and not for common use if the swing of the door can be reversed (§603.2.3, Ex. 1).

When is a toilet room required to be designed for children?

The Standards do not require that toilet rooms be designed for children. This determination is usually made based on other building requirements or regulations, good practice, or client preference. However, the Standards do provide alternate specifications based on children’s dimensions that can be followed where a toilet room is designed for children.

If a restroom serves both adults and children, must an accessible toilet compartment be provided for both adults and children?

In restrooms that serve both adults and children, it is advisable, but not required, to provide wheelchair accessible toilet compartments for both user groups, but the Standards require only one wheelchair accessible toilet compartment in all toilet rooms.

Can elements with knee and toe space overlap the required turning space?

Yes. Elements that provide compliant knee and toe space, such as lavatories, can overlap a portion of the turning space.

Can elements with knee and toe space overlap the door maneuvering clearance?

No. Elements, including those providing knee and toe space, cannot overlap or protrude into the maneuvering clearance required at doors and doorways. However, door maneuvering clearances can be offset up to 8” from the face of the door to accommodate wall thickness, casework, shelves, or other elements adjacent to doorways, including grab bars. The door maneuvering clearance must be measured from the leading edge of such elements so that the full clearance is free of any obstruction.

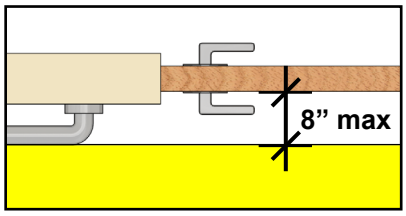

Grab bars and other elements cannot overlap the door maneuvering clearance but can be located within the 8” max. offset from the face of the door.

Must toilet rooms be identified by the International Symbol of Accessibility (ISA)?

Labeling accessible toilet rooms with the ISA is required only where inaccessible toilet rooms are present. For example, half of single user toilet rooms of the same type in each cluster (5% in the case of portable units) are required to comply, and those that are accessible must be identified by the ISA unless all are accessible (§213.2, Ex. 4, §216.8). In alterations where existing toilet rooms do not comply, directional signs with the ISA must be provided to indicate the location of the nearest accessible toilet room which must be labeled by the ISA.

Do the Standards require restroom pictograms?

No. The ISA is the only pictogram the Standards require in labeling toilet rooms. Other codes or regulations may require pictograms to identify men’s and women’s rooms and unisex restrooms. The Standards require that pictograms labeling permanent rooms and spaces, including toilet rooms, be on a field at least 6” high and include the verbal equivalent in raised characters and braille below the pictogram. Informational pictograms, such as the ISA, are not subject to the requirements for field height or verbal text.

Do the Standards require accessible toilet compartments, including the ambulatory accessible compartment, to be labeled by the ISA?

No. The Standards do not require toilet compartments to be identified by the ISA.

Water Closets

Can an adjacent lavatory overlap the water closet clearance?

No. Lavatories are not permitted to overlap the 60” wide minimum space at water closets, except in residential dwelling units if the water closet clearance is 66” deep min. (§604.3.2, Ex.). Lavatories (or other plumbing fixtures) can be adjacent to the water closet if recessed so as not to overlap the water closet clearance. (The rear grab bar can be 24” long in this instance if there is not sufficient wall space for a 36” grab bar.)

Can other elements overlap the water closet clearance?

The only elements beside the water closet that can overlap the water closet clearance are: associated grab bars, dispensers, coat hooks, shelves, and sanitary napkin disposal units (§604.3.2). No other elements can overlap the water closet clearance.

Can the toilet paper dispenser be mounted above the side grab bar?

Toilet paper dispensers can be mounted above the side grab bar if they do not protrude into the 12” high minimum clearance above the bar and the outlet is within the maximum 48” height. With large roll dispensers, ensuring that the outlet is within the height limit can be difficult when mounted above bars unless they are recessed.

How is the distance from the water closet measured for toilet paper dispensers with large or multiple rolls?

The required distance of toilet paper dispensers from the front of the water closet (7” – 9”) is measured to the centerline of the dispenser, including large-roll and multiple-roll dispensers.

How can conflicts between the rear grab bar and the required location of flush controls be resolved?

If plumbing codes require a flush control location that conflicts with the rear grab bar, the grab bar may be split or shifted to the open side. This is permitted only where applicable codes mandate flush controls in such a location.

Are automatic (motion sensor) flush controls required to be on the open side of the water closet?

No. Motion activated flush controls are not required to be on the open side of the water closet. If a water closet has a manual flush control in addition to a motion activated one, it is recommended, but not required, that the manual control be located on the open side of the water closet. Manual flush controls, even those intended for custodian use, are helpful at water closets and urinals when the motion sensor fails to activate.

Are flush controls located on valves, walls, or tanks that are centered on the fixture compliant (i.e., on the open side)?

Manual flush controls, including push buttons, must be usable from a point between the centerline and the open side of the fixture. A portion of the control can be outside the range if it is usable without having to reach beyond the water closet centerline from the open side.

Can the side and rear grab bars be continuous?

Yes. The rear and side grab bar can be continuous or separate, but in either case must comply with the specified length and placement.

Must the side and rear grab bar both be at the same height within the specified 33" – 36" range?

The Standards do not require both grab bars at the water closet to be at the same height, although this is advisable. (Horizontal grab bars at showers must be at the same height.)

Can the side grab bar be located on a half wall or wing wall?

Grab bars, if properly secured, can be mounted on a half wall or wing wall where sufficient wall surface above the grab bar is available. Wall surface above grab bars provides support and helps prevent arms from slipping off the bar. Wall surface that extends the full height of the required 12" clearance above grab bars, or preferably to the standard adult shoulder height for standees, should provide sufficient support in using grab bars.

Can the side grab bar be mounted on blocking when the centerline of the water closet exceeds the 18" maximum?

In new construction, the wall should be furred out so that the water closet centerline is within the required 16" – 18" distance from the side wall. In addressing access to existing water closets that are too far from the side wall, the side grab bar can be mounted on blocking but it is important that the blocking extend at least 12" above the grab bar so that adequate wall support is available when using the grab bar.

Can grab bar attachments be located at points along the bar instead of at the ends?

Yes. Grab bar attachments can be at points other than the ends of grab bars.

How is the length of grab bars measured?

Grab bar length is measured to the centerline of the return, consistent with industry convention. This also applies to post-mounted grab bars. When attached at points other than the ends (e.g., "European" style grab bars), the length is measured to the end of the bar.

Can grab bars be mounted to the floor instead of the wall?

No. The Standards require grab bars at water closets on the side and rear wall (§604.5). Grab bars that are floor-mounted obstruct usable clear floor space at the water closet and may be difficult to secure.

Must grab bars have a peened or other textured surface?

No. The Standards do not require grab bars to have peened or textured surfaces.

Are folding or swing-away grab bars permitted on the open side of water closets?

Folding or swing-away grab bars are not prohibited by the Standards so long as they do not obstruct use of the required grab bars. It is important that they are properly secured.

Is a vertical grab bar required by the Standards?

No. The ADA Standards do not require a vertical grab bar at water closets. However, the ICC A117.1 standard, which is referenced by the International Building Code, requires an 18" minimum vertical grab bar on the side wall above the horizontal grab bar for people who are ambulatory. This grab bar can be located within the 12" minimum clearance required above the horizontal grab bar.

Can grab bars have infill plates to prevent suicide or security risks in detention and correctional facilities?

In detention and correctional facilities, grab bars must fully comply at water closets serving accessible cells. Infill plates and other anti-ligature measures may be provided in detention and correctional facilities and other facilities so long as they do not impede gripping surfaces. Grab bars are not required in those cells that are specially designed without protrusions for suicide prevention (§604.5, Ex. 3).

Toilet Compartments

What distinguishes "toilet compartments" from single-user "toilet rooms"?

In some cases, it may be unclear whether water closets enclosed by full height partitions are to be treated as toilet compartments or single-user toilet rooms under the Standards. Toilet compartments can have full-height partitions. The determination typically is based on whether the toilet compartment is located within a restroom/ bathing facility or if it is entered directly from a common use corridor or exterior route. Those located within a room (such as a men's room, women's room, or gender neutral multi-user restroom, locker room, shower room) can be scoped as toilet compartments under the Standards: at least one wheelchair accessible and, if six or more water closets/urinals are provided, at least one ambulatory accessible compartment (§213.3.1). Those that directly connect to, or are separated by, a hallway, corridor, or exterior route, are scoped as single-user toilet rooms: all must comply except that where clustered, 50% of each use must comply (§213.2). If a toilet compartment contains more than one plumbing fixture (e.g., a lavatory), it must comply as a toilet room (§604.8).

Can compartment door openings be located more than 4" from the side partition when the compartment width exceeds the 60" minimum?

The Standards require the door opening to be located 4" maximum from the side partition further from the water closet (or, if located in the side partition, 4" maximum from the front partition). An increase above the 4" maximum where compartments exceed the 60" minimum width may not impact usability if the extra width of the compartment equals or exceeds the increase above the 4" maximum (as permitted by the ICC A117.1 Standard), but such a departure must be based on the provision of equivalent facilitation (§103).

Are toilet compartment doors prohibited from swinging into fixture clearances?

Yes. Toilet compartment doors, including those of inaccessible compartments, cannot swing into clearances required at lavatories and other plumbing fixtures. In addition, the compartment doors cannot swing into the minimum required area of wheelchair accessible and ambulatory accessible compartments.

Are spring hinges and gravity hinges on compartment doors considered "closers" in determining the size of maneuvering clearances?

No. Some approaches require additional maneuvering clearance when a door or gate is equipped with a closer because of the additional force that must be counteracted in proceeding through doors. Since spring and gravity hinges do not significantly impact maneuvering at doors, they are not "closers" for purposes of specifying door maneuvering clearance.

Can accessible toilet compartments have full-height walls instead of partition panels?

Yes. But the minimum compartment size (both width and depth) is increased more than 6" if minimum toe clearance is not provided below the front partition and a side partition. Doors, including full door assemblies, must be self-closing and meet all applicable requirements for doors.

Can pilasters or other partition supports intrude into the required toe clearance below partitions?

Yes. Vertical supports for partitions are permitted within the required toe clearance. The width of supports is not specified or limited by the Standards.

Lavatories and Mirrors

Can a lavatory be located outside of a toilet room?

The Standards do not prohibit location of lavatories outside toilet rooms where permitted by codes and other regulations.

Can a lavatory be provided in a wheelchair accessible toilet compartment?

Yes. But the toilet compartment must meet requirements for toilet rooms, including turning space (§604.8). A second accessible lavatory must be provided outside the compartment (§213.3.4).

Must the clear floor space at lavatories be centered?

It is advisable, though not required, that the clear floor space be nominally centered on the fixture.

Can accessible mirrors be located above lavatories?

Accessible mirrors can be located above lavatories or countertops if the bottom of the reflecting surface is 40” max. above the finish floor (§603.3). The bottom of the reflecting surface of mirrors not located above lavatories or countertops must be 35” max. above the finish floor.

If a toilet room has a full-length mirror and a mirror above a countertop or lavatory, must both types comply?

No. The Standards require only one mirror in a toilet room to comply. If mirrors are provided above lavatories or counters and at other locations in a toilet room, it is advisable, but not required, that one of each type comply.

UNITED STATES ACCESS BOARD
Advancing Full Access and Inclusion for All
1331 F Street, NW ▪ Suite 1000 ▪ Washington, DC 20004-1111
(202) 272-0080 (v) ▪ (202) 272-0082 (TTY) ▪ www.access-board.gov

April 2020