Ramps and Curb Ramps

This guide explains requirements in the ABA Standards for ramps and curb ramps.

Where Ramps and Curb Ramps are Required [§303.4]

Ramps and curb ramps are required along accessible routes to span changes in level greater than ½". Elevators and, under certain specified conditions, platform lifts, can be used as an alternative. Portions of accessible routes with running slopes steeper than 5% also must be treated as ramps.

Ramp Requirements [§405]

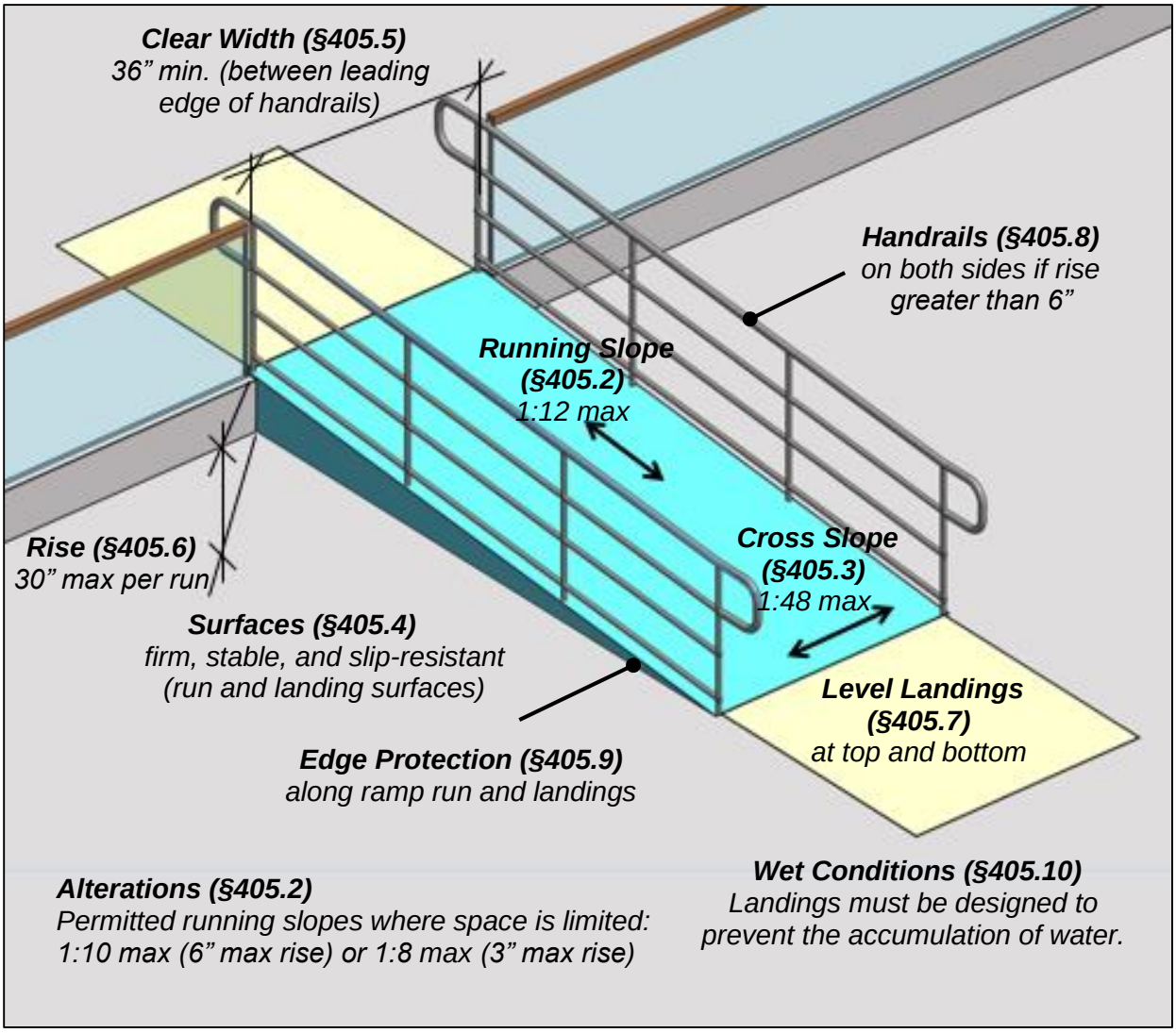

Slope [§405.2] and Cross Slope [§405.3]

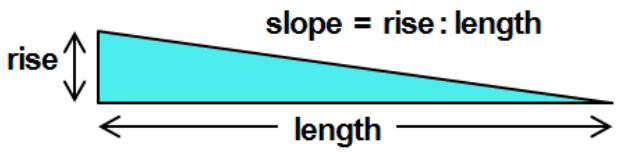

Slope represents the proportion of vertical rise to horizontal length and is specified in the Standards as a ratio (e.g., 1:12). It also can be expressed as a percentage, pitch, or in degrees. The running slope is to be uniform along a run, although slight variations may occur with certain materials such as concrete. No other changes in level other than the running slope (1:12 max.) and cross slope (1:48 max.) are permitted. Variations in slope, such as grade breaks within runs, can disrupt wheelchair travel.

Recommendations: Providing the least possible slope below the 1:12 (8.33%) maximum offers better usability for a wider range of users. Specifying a running slope of 7.5% maximum and a cross slope of 1.5% maximum for exterior ramps will accommodate most irregularities or variances due to construction methods or materials according to a study sponsored by the Board ("Dimensional Tolerances in Construction and for Surface Accessibility" by David Kent Ballast.)

Clear Width [§405.5]

Ramp runs must have a clear width of 36" minimum (measured between handrails where provided). The width of ramps that are part of a means of egress may further be determined by applicable life safety codes and requirements for minimum exit widths greater than 36".

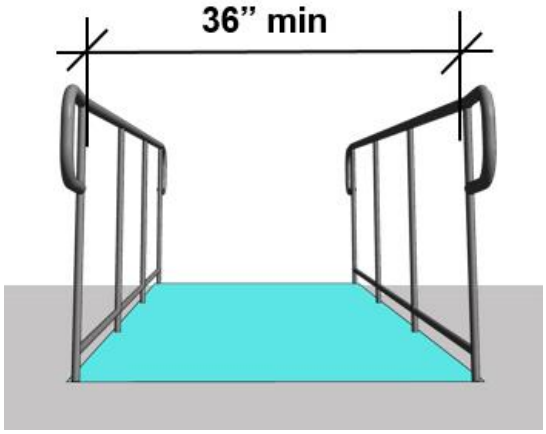

Employee Work Areas
In employee work areas, ramps on common use circulation paths are permitted exceptions pertaining to the clear width and to handrails:

- *the clear width can be reduced below 36" by work area equipment where it is essential to the work being performed (§405.5); and*
- *handrails can be installed after construction, as needed (ramps must be sized so that the minimum clear width is maintained) (§405.8).*

Rise [§405.6]

The height of runs is limited (30" max.), but there is no limit on the number of runs a ramp may have. Long ramps with many runs can be strenuous for people using manual wheelchairs. While intermediate landings offer resting points, they do not reduce the amount of effort that must be exerted to negotiate multiple runs.

Landings [§405.7]

Level landings are required at the top and bottom of each run. Changes in level greater than 1:48 are not permitted at landings. Landings must be designed to prevent the accumulation of water.

Grade breaks (i.e., where the change in slope occurs) must be perpendicular to the direction of ramp runs to prevent cross-slope issues and uneven surfaces.

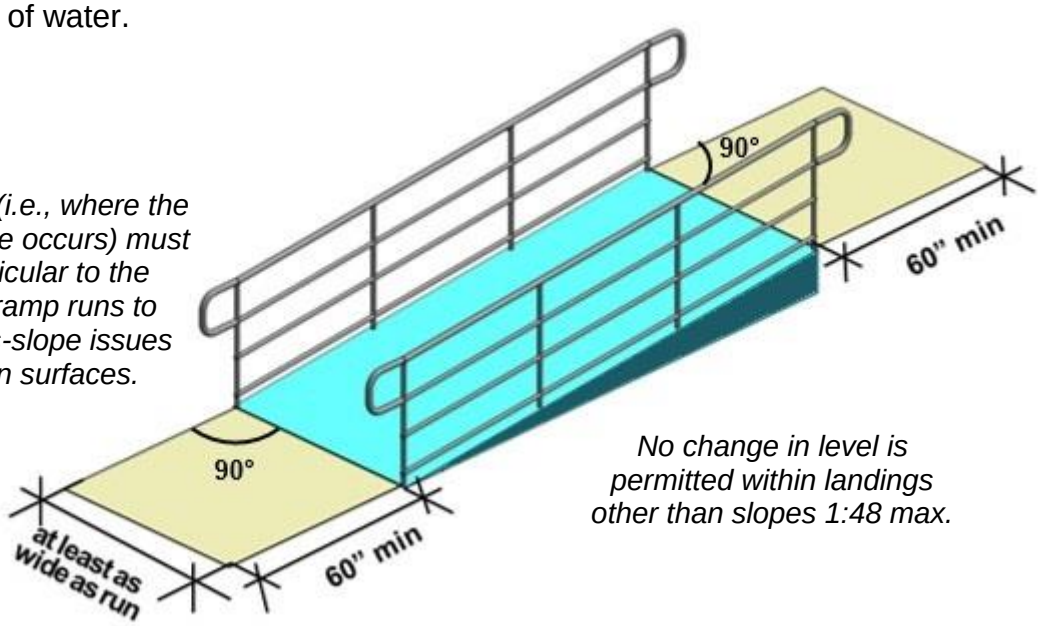

No change in level is permitted within landings other than slopes 1:48 max.

Intermediate landings between runs must be at least 60" wide clear and 60" long clear where ramps change direction (any change from linear). Handrails, edge protection, vertical posts and other elements cannot obstruct or overlap the minimum 60" by 60" clearance. The 12" minimum handrail extensions required at the top and bottom of ramp runs must be in the same direction of the run, but they can turn or wrap where handrails are continuous at the inside turn of dogleg or switchback ramps.

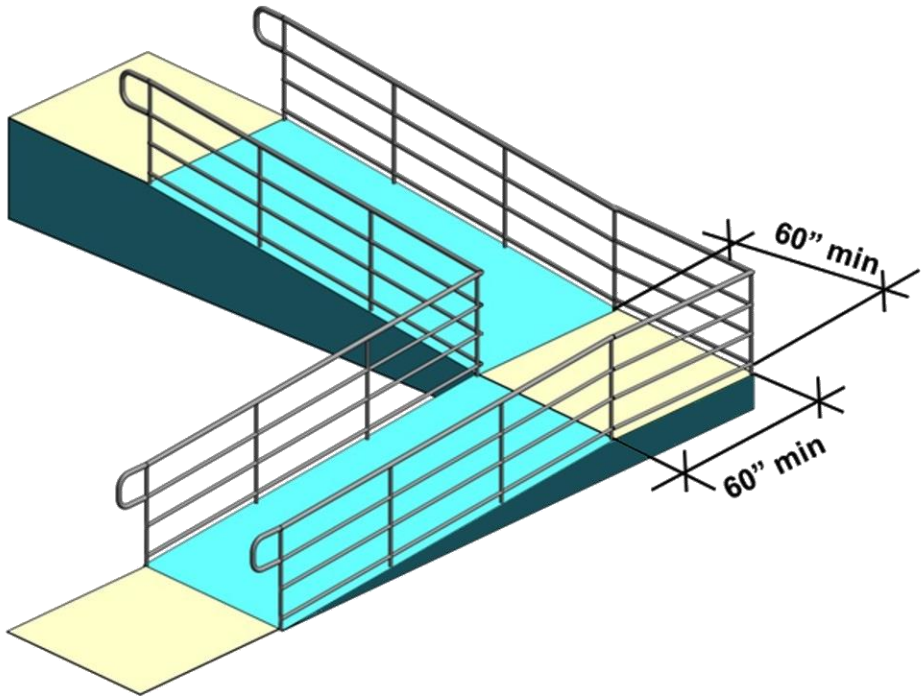

Intermediate Landings Where Ramps Change Direction

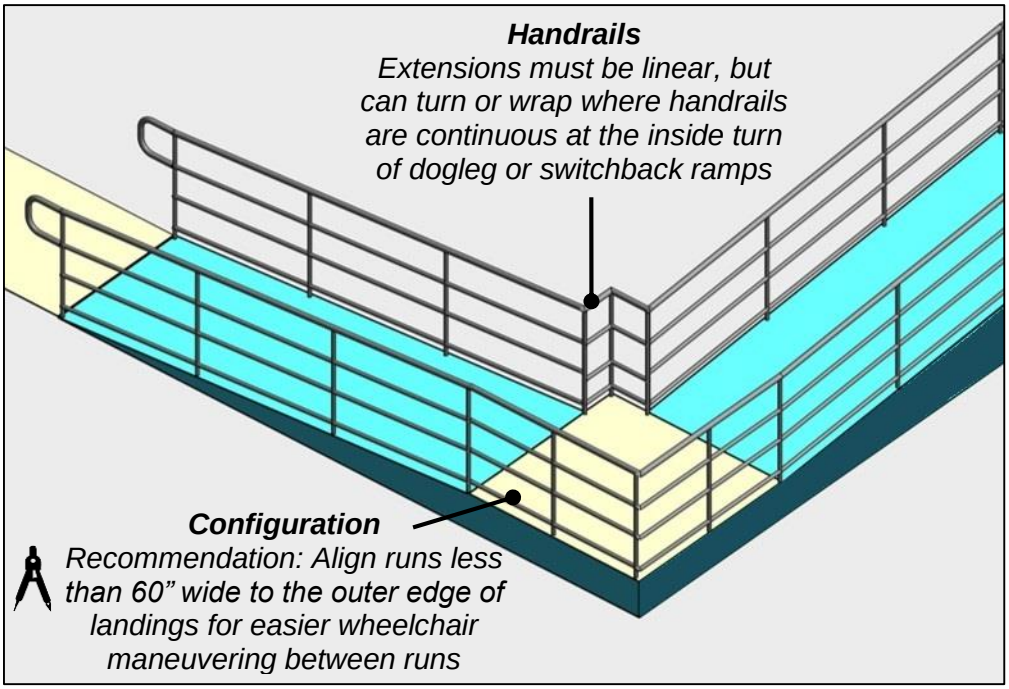

Doorways at Landings [§405.7.5]

Required door maneuvering clearances can overlap ramp landings (it is advisable to locate the swing of doors outside ramp landings for greater safety.

Doorways at Ramp Landings

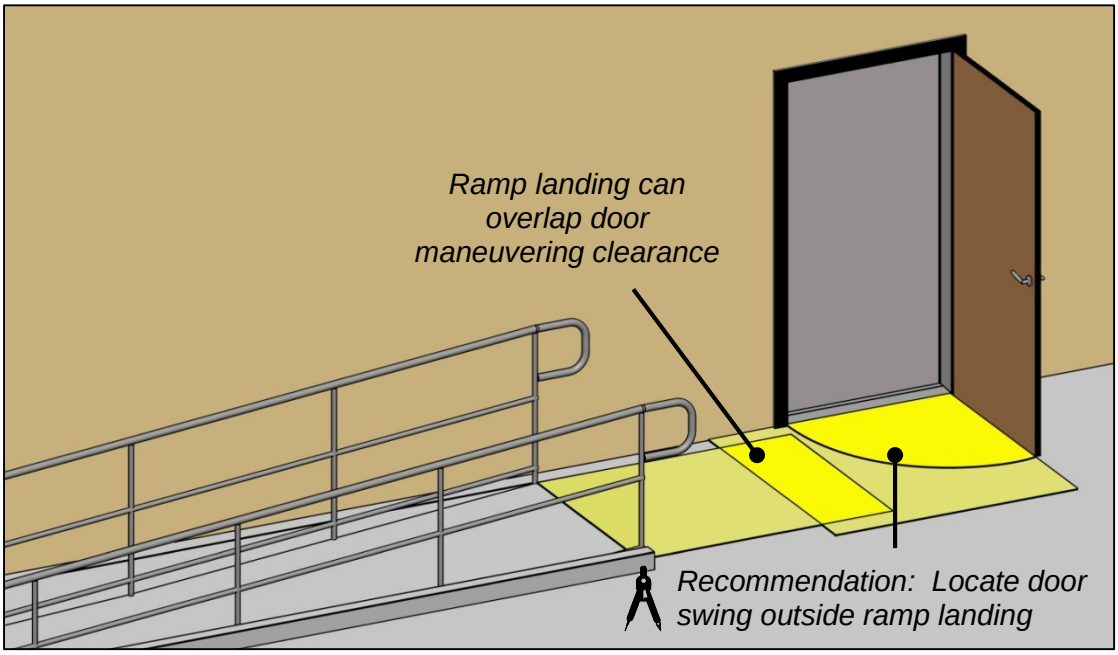

Handrails [§405.8, §505]

Handrails are required on both sides of ramps with a rise greater than 6”. The Standards do not require lower handrails serving children except at ramps serving play areas, but include a recommended height (28” max.) and separation (9” min.) from the required handrail to minimize entrapment hazards.

Handrail Height and Clearance

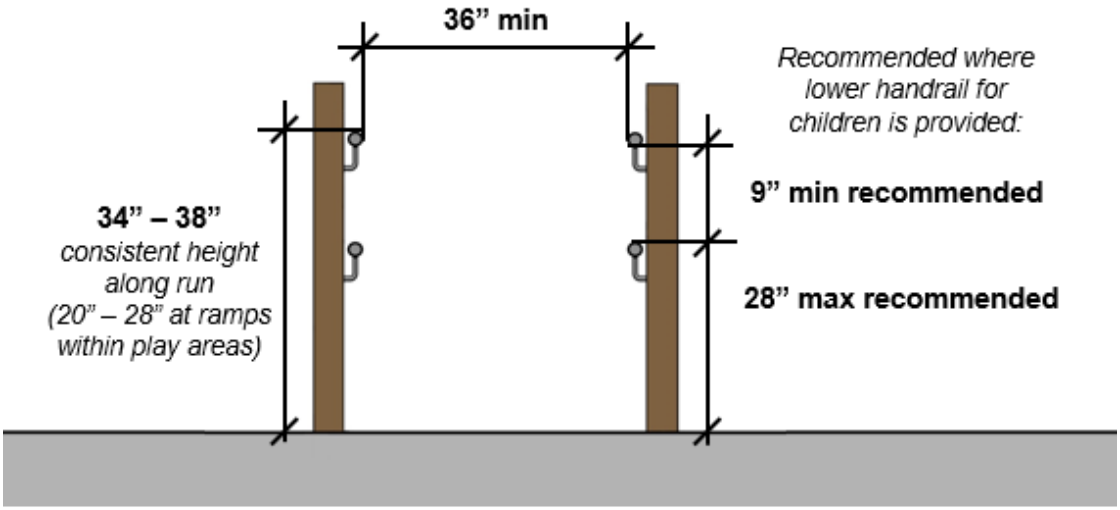

Handrail Continuity and Extensions

Extensions 12” long min. in the same direction of travel are required at the top and bottom of runs (except for inside rail of switchback ramps) to provide support before entering or exiting ramps.

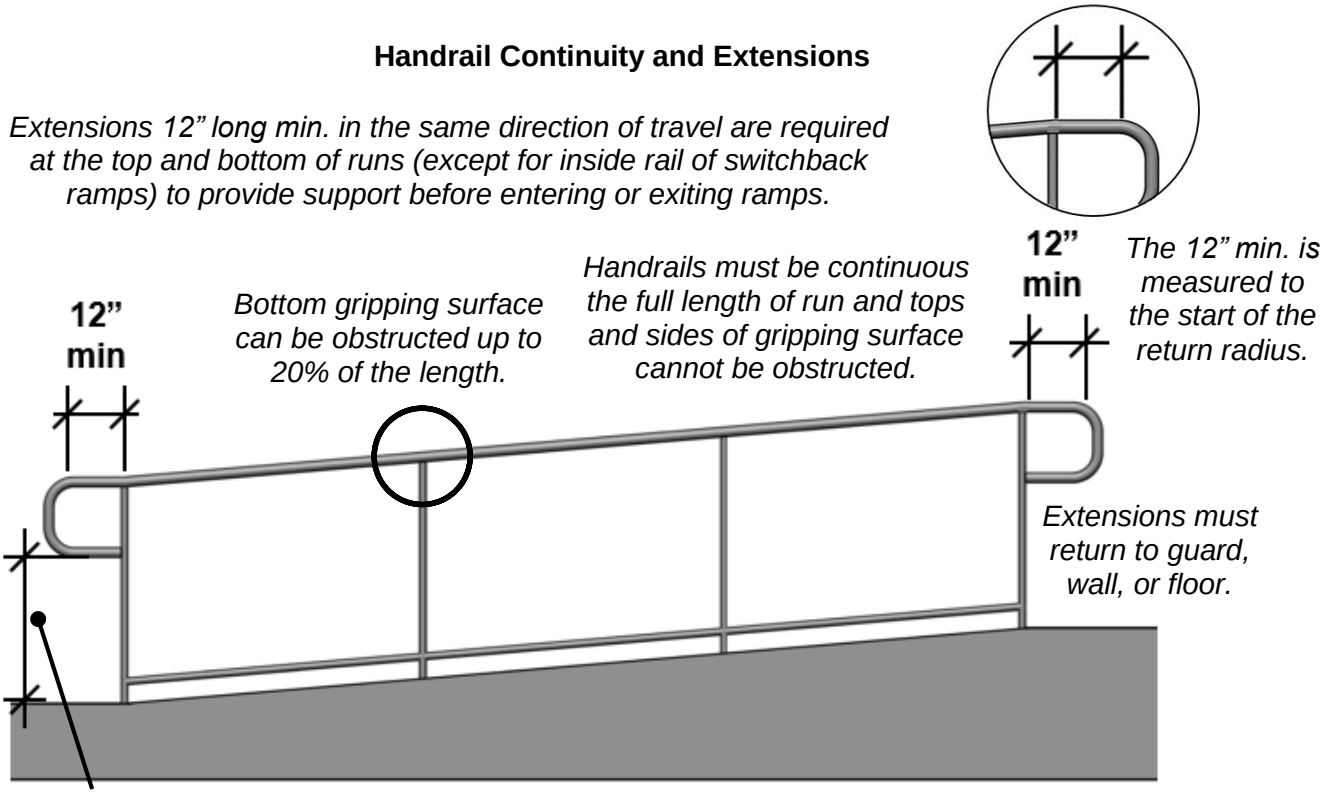

Extensions with a leading edge 27” high max. can extend any amount from posts. Those with a leading edge higher than 27” are limited to a 12” protrusion from posts (§307.3). The sloping portion of handrails are not required to comply with requirements for protruding objects.

Surface requirements and clearances facilitate a power grip along the length of handrails. Handrails can have circular or non-circular cross-sections, but must have rounded edges. The gripping surface and adjacent surfaces must be free of abrasive or sharp elements.

Circular Cross Section and Clearance (§505.5, §505.7)

Specifications for handrails also address the diameter of circular cross sections and required knuckle clearance.

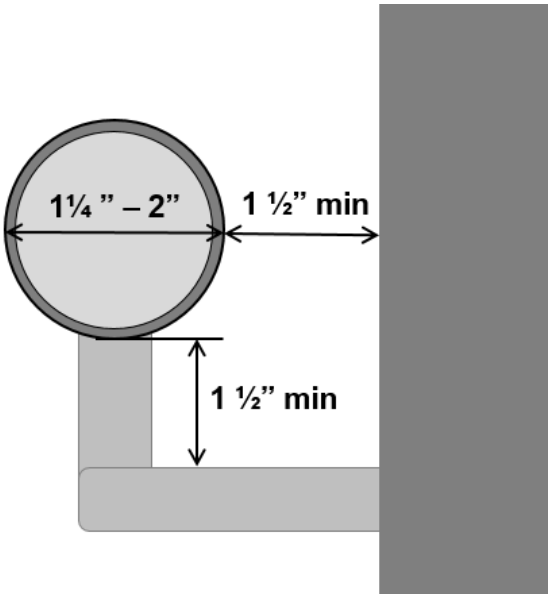

Non-Circular Cross Section and Clearance (§505.5, §505.7)

Non-circular cross sections must have rounded edges and meet perimeter and cross-section dimensions. Other profiles meeting these criteria are permitted.

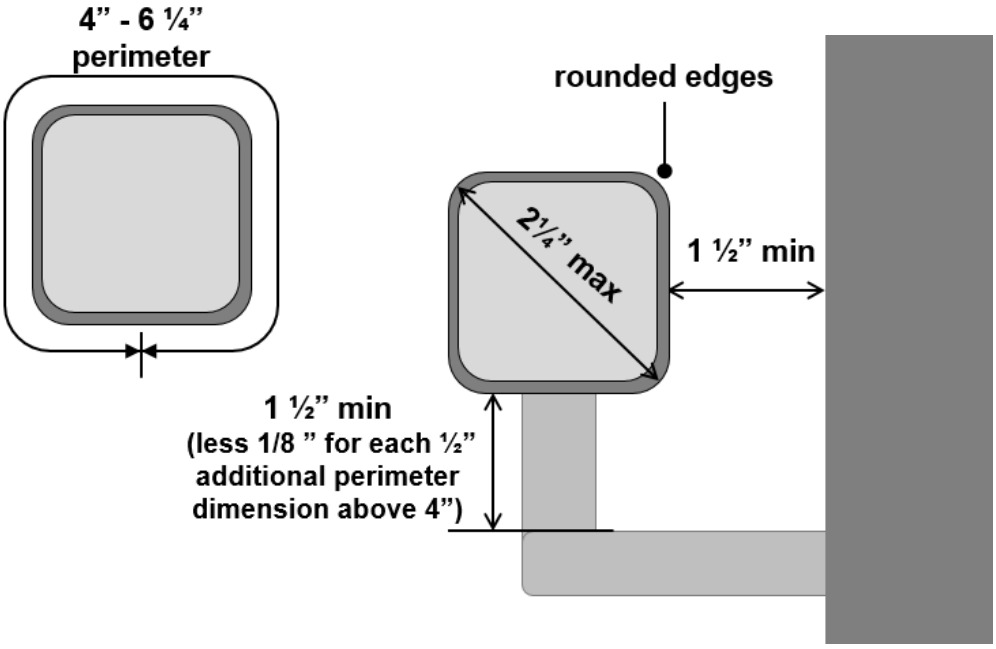

Aisle Ramps in Assembly Areas

In assembly areas, aisle ramps required to be accessible are exempt from some handrail requirements. Aisle ramps (or portions of them) adjacent to seating that are not part of a required accessible route to accessible seating or to other accessible elements do not have to comply with any ramp or handrail requirements.

Aisle Ramps in Assembly Areas

Aisle ramps that are part of a required accessible route can have handrails on at least one side or within the aisle width instead of on both sides as required for other types of ramps. (§505.2)

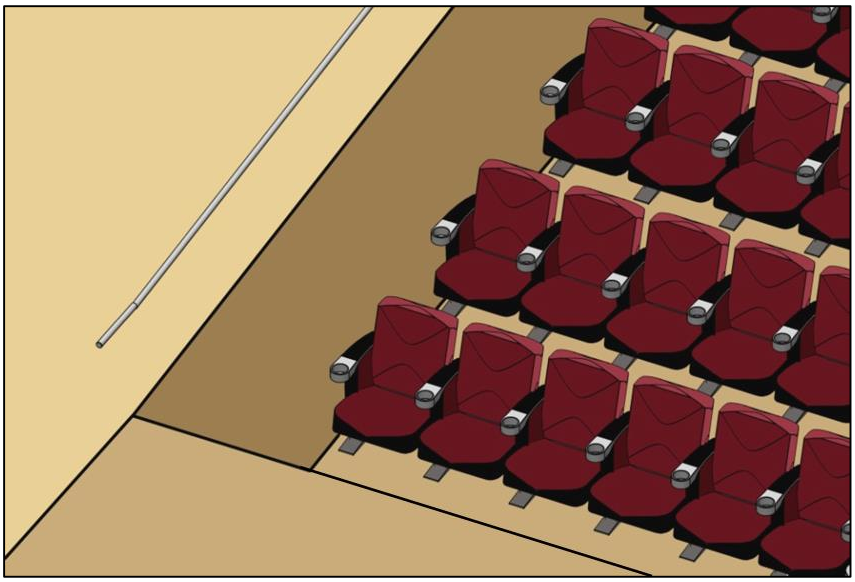

Handrails on assembly area ramps can be discontinuous and lack extensions to allow access to seating and to permit crossovers within aisles. (§505.3, §505.10)

Other handrails specifications, including those for height, clearance, gripping surface, and cross section, apply.

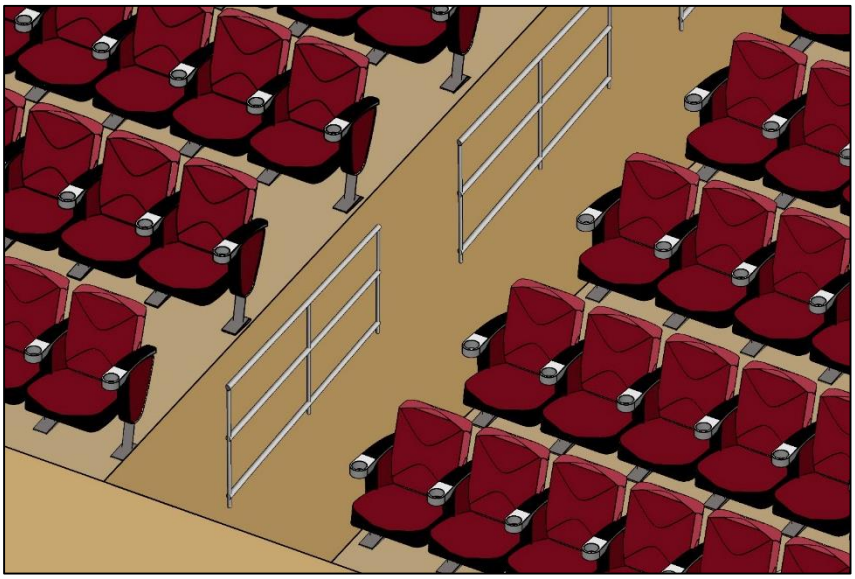

Edge Protection [§405.9]

Edge protection along ramp runs and landings keep wheelchair casters and crutch tips on the surface and can be provided by curbs, barriers, or extended surfaces.

Edge Protection Alternatives

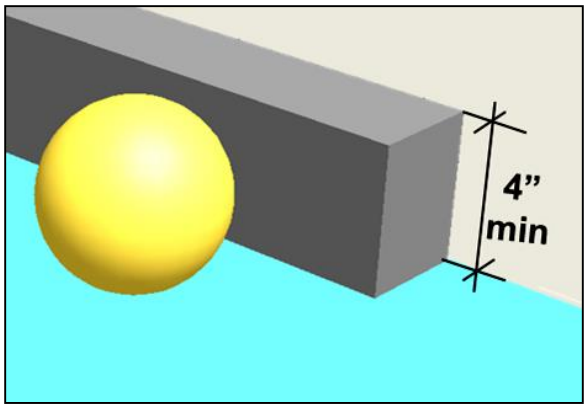

Curbs if used must be at least 4” high.

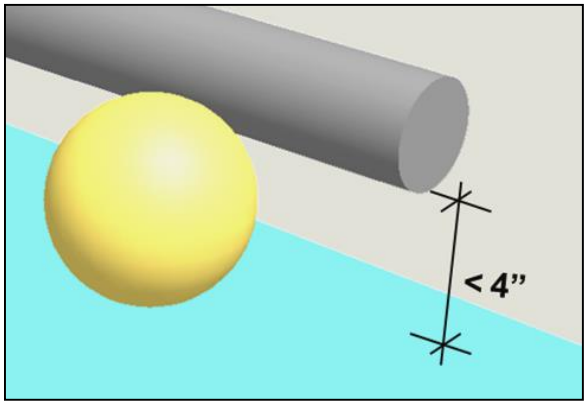

Rails or other barriers must prevent passage of a 4” diameter sphere.

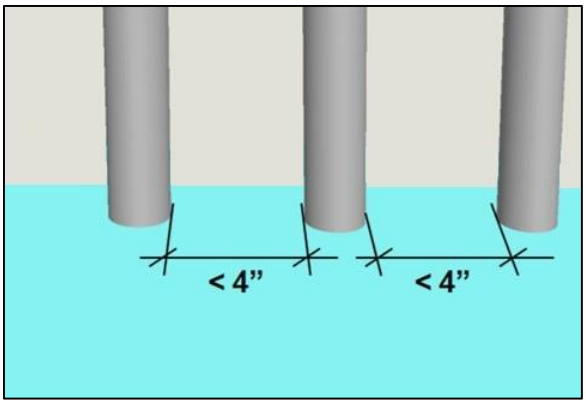

Vertical pickets used for edge protection must prevent passage of a 4” diameter sphere.

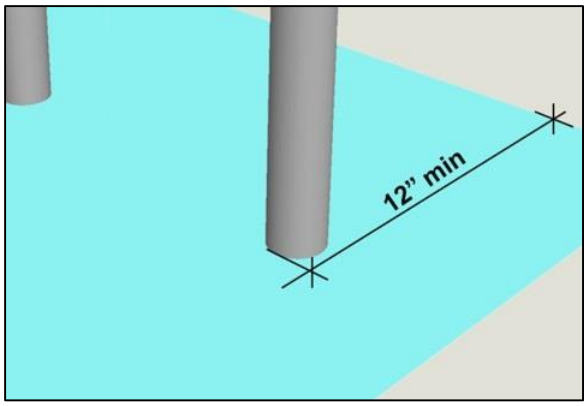

Run and landing surfaces that extend at least 12” beyond the inside face of handrails will provide adequate edge protection by preventing wheelchair casters and crutch tips from slipping off the edge.

Edge protection is not required at:

- ramps no higher than 6” that have side flares
- ramp landings serving an adjoining run or stairway
- sides of ramp landings with vertical drop-offs not exceeding ½” within 10” of the minimum landing area

Wet Conditions [§405.10]

Landings subject to wet conditions must be designed to prevent the accumulation of water. Landings are permitted slopes not steeper than 1:48 to allow for drainage.

Curb Ramps [§406]

Requirements for curb ramps apply to ramps that cut through curbs or are built up to them. New guidelines the Board is developing for public rights-of-way will further address curb ramps located along public streets and sidewalks, but they are not discussed in this guide.

Curb Ramp Requirements [§406]

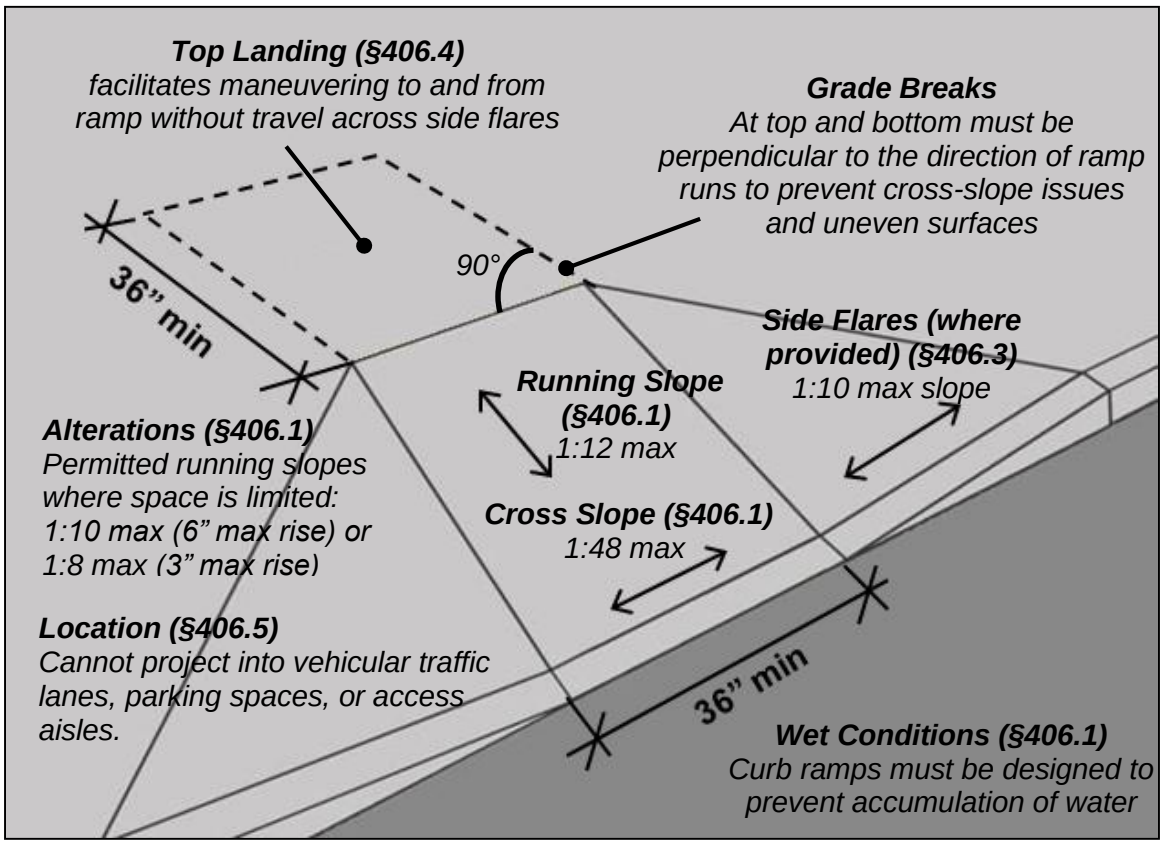

Transition to Street [§406.2]

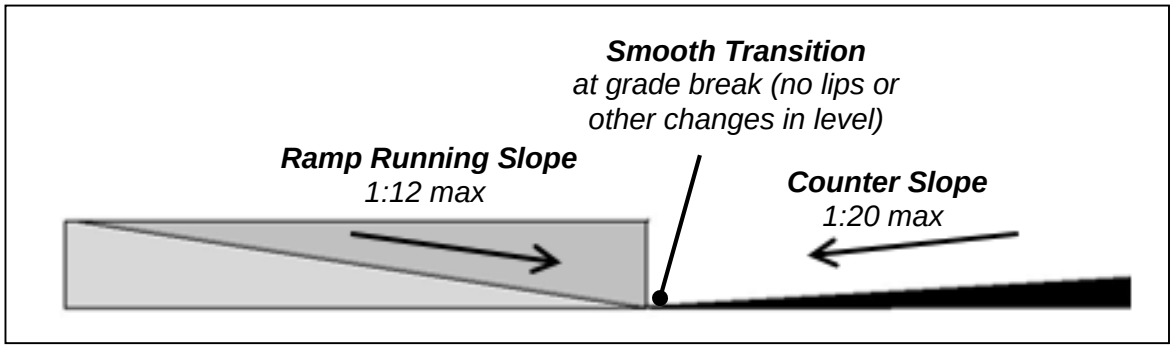

Top Landing [§406.4]

The required landing at the top of curb ramps allows an accessible route to connect to the ramp opening. Side flares, where provided, are intended primarily to prevent tripping hazards, not to accommodate wheelchair maneuvering at ramps (except in alterations where sufficient landing space is unavailable). Side flare slopes cannot exceed 1:10 max. (or 1:12 max. in alterations where a top landing is unavailable).

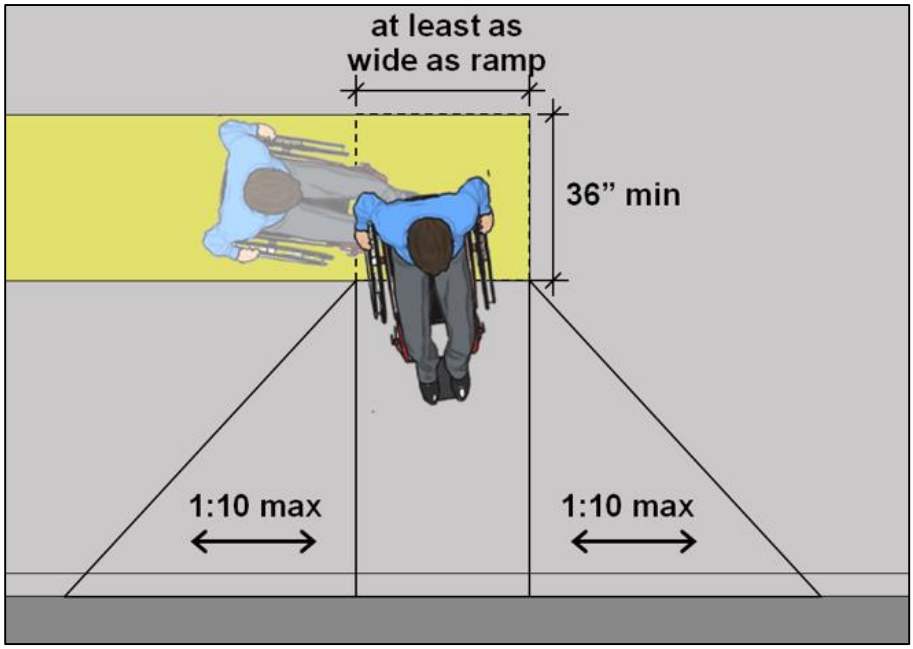

Alterations: Ramp without Top Landing

In alterations where sufficient landing space is not available, side flares must be provided and cannot slope more than 1:12 to facilitate wheelchair maneuvering. Parallel curb ramps (page 12) provide an alternative in such conditions.

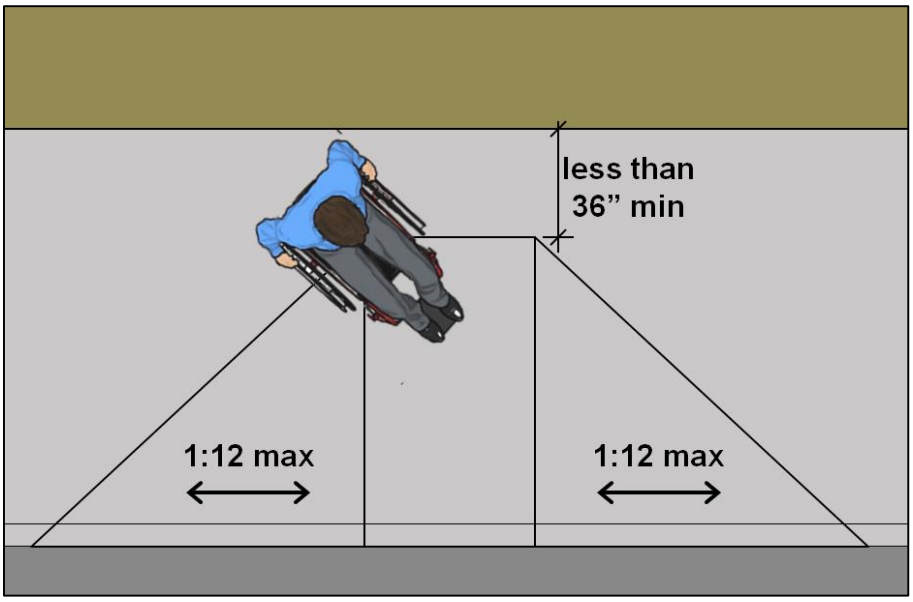

Top Landing Slope

The maximum slope of the top landing is determined by the configuration of connecting accessible routes.

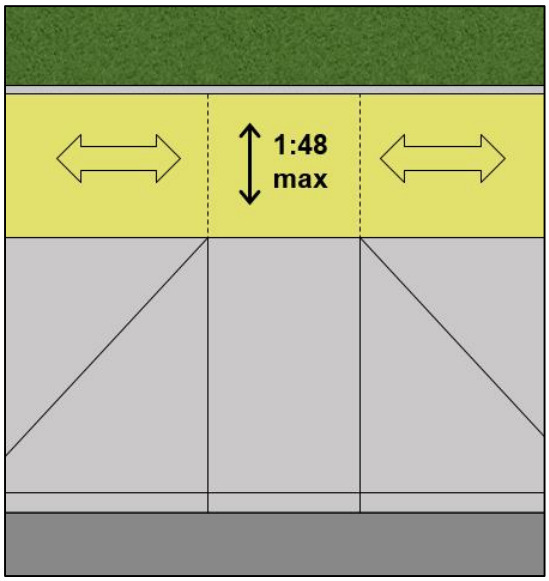

Perpendicular Accessible Route
The cross slope of perpendicular connecting routes limit the slope of the ramp top landing to 1:48 (measured parallel to the running slope).

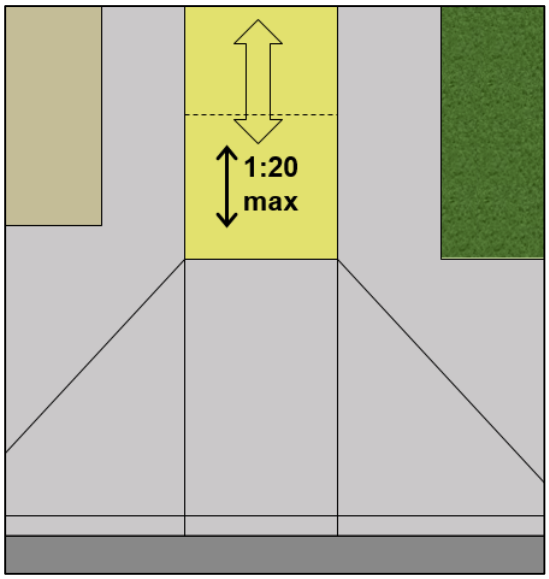

Parallel Accessible Route
If the only connecting accessible route runs parallel to the ramp run, the top landing can slope 1:20 max.

Sides of Curb Ramps [§406.3]

Curb ramps can have returned sides, but a top landing is required under all conditions to allow maneuvering to and from the run.

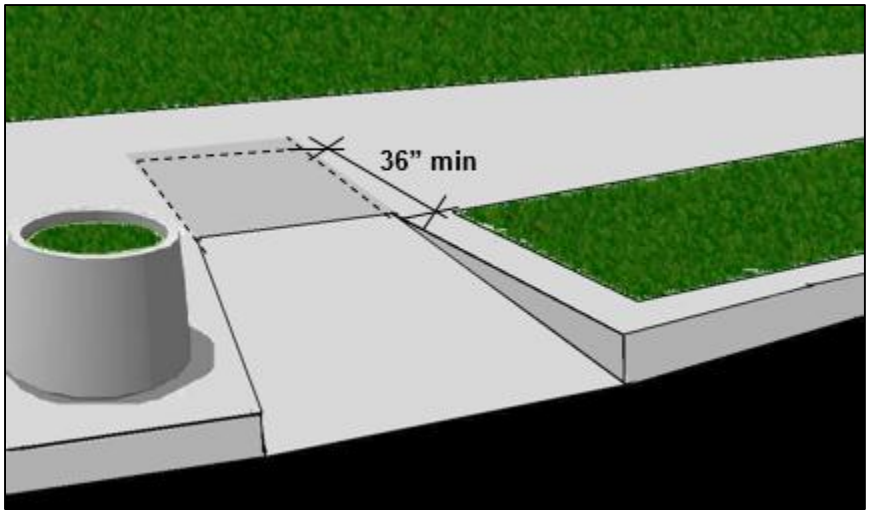

Recommendation: To prevent tripping hazards, curb ramps with returned sides should be used only where foot traffic across ramps is prevented or discouraged.

Built-Up Curb Ramps

Built-up curb ramps are permitted, but they cannot project in parking spaces, access aisles, or vehicle traffic lanes. A top landing at least 36” deep is required at all built-up curb ramps.

Built-Up Curb Ramp with Side Flares

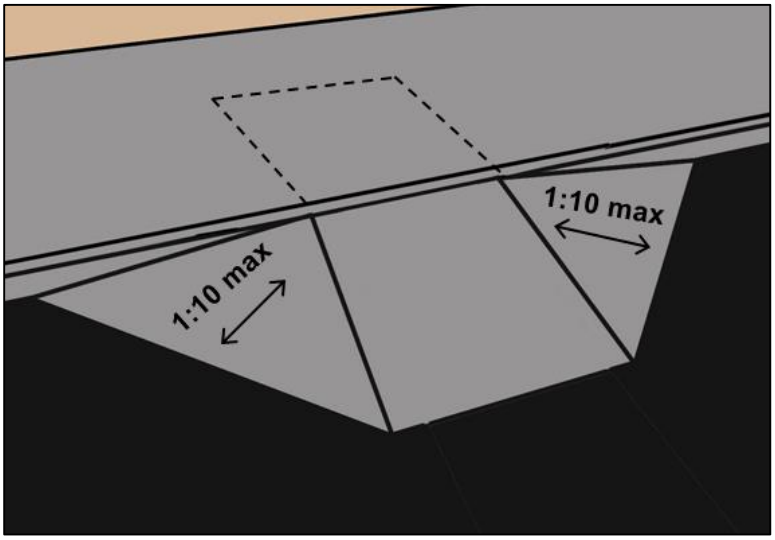

Side flares can be provided to prevent tripping hazards. Edge protection is not specified for curb ramps.

Recommendation: Provide edge protection along the sides of built-up curb ramps to prevent tipping hazards. Otherwise, consider a wider ramp width (48” min.) so that maneuvering does not occur near drop-offs.

Parallel Curb Ramps

Curb ramps can be oriented parallel to sidewalks. This design provides an option where limited space precludes a top landing. A level landing 60” long minimum accommodates maneuvering between runs and right-angle turns to connecting routes, such as parking access aisles and crossings.

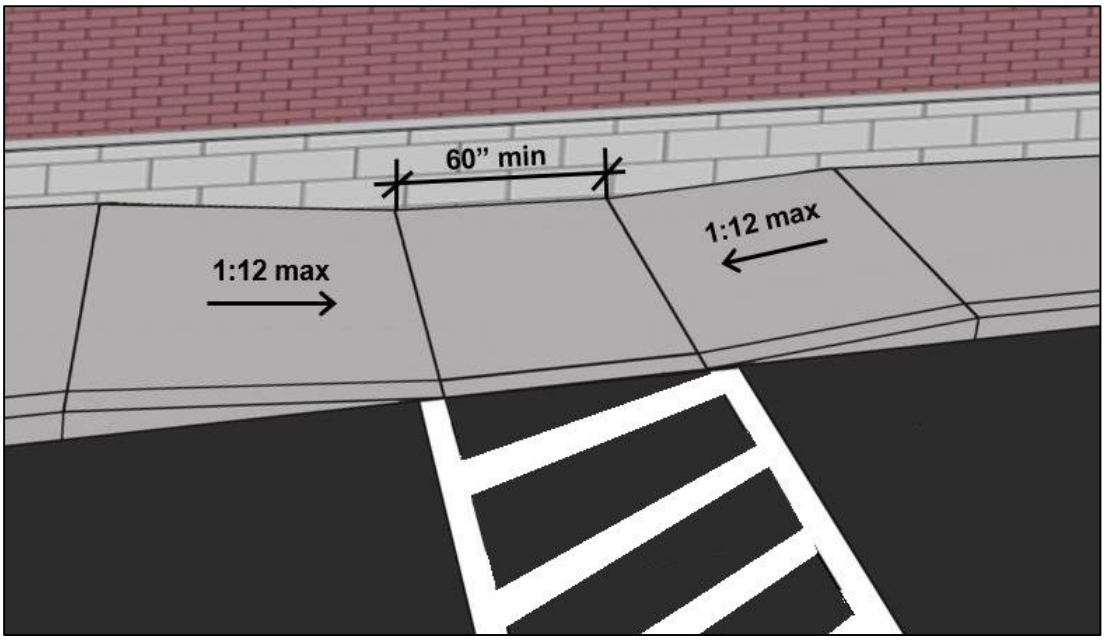

Curb Ramps at Intersections

Curb ramps at marked crossings must be wholly contained within the crosswalk, excluding side flares. The Standards do not require crossings to be marked or address how they are to be marked, but public street crossings are addressed by the Manual on Uniform Traffic Control Devices (MUTCD) for Streets and Highways.

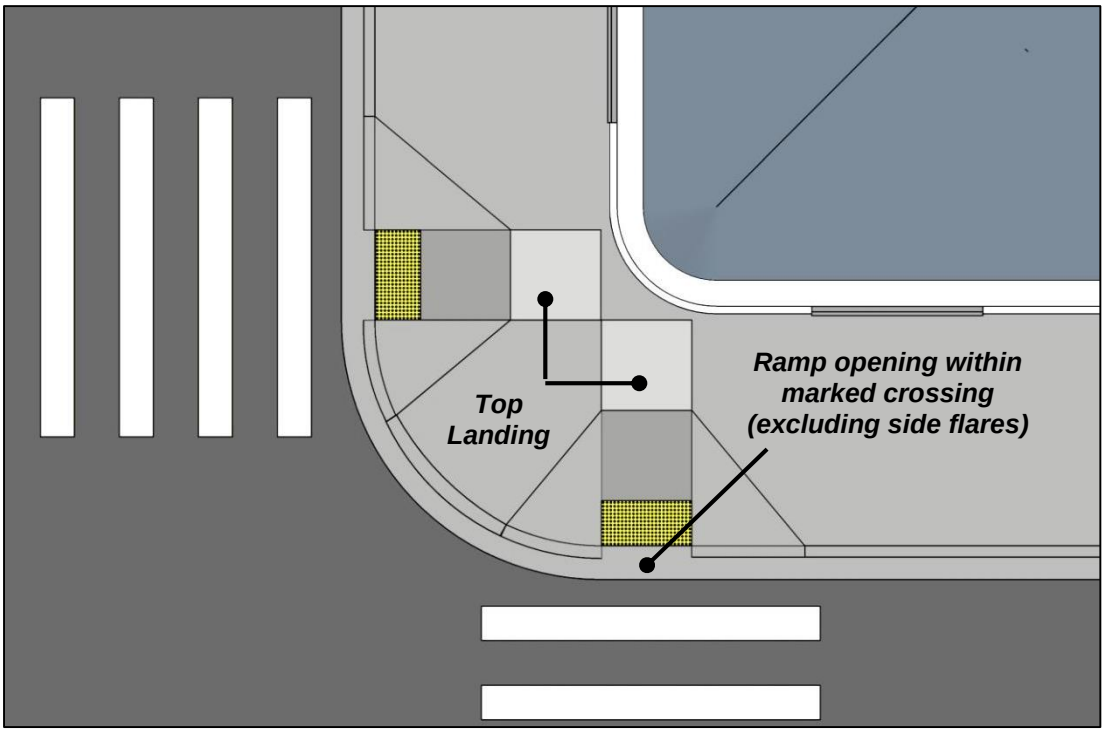

Curb ramps must be oriented so that the grade break is perpendicular to the curb ramp run to ensure a smooth transition to streets, including at corners with a wide radius. The curb ramp opening can be aligned with the curb line (left) or more directionally oriented to the crosswalk (right).

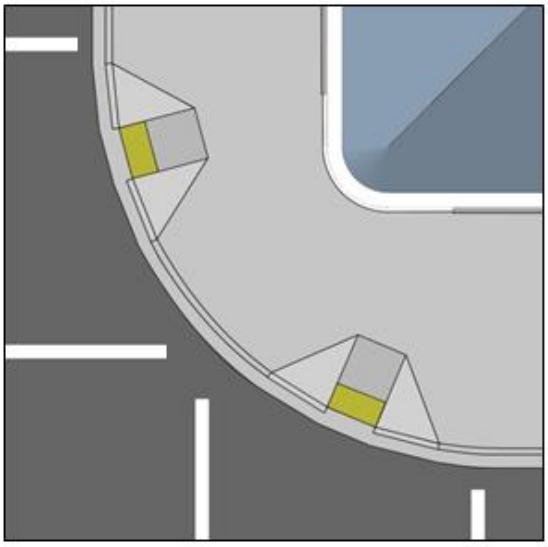

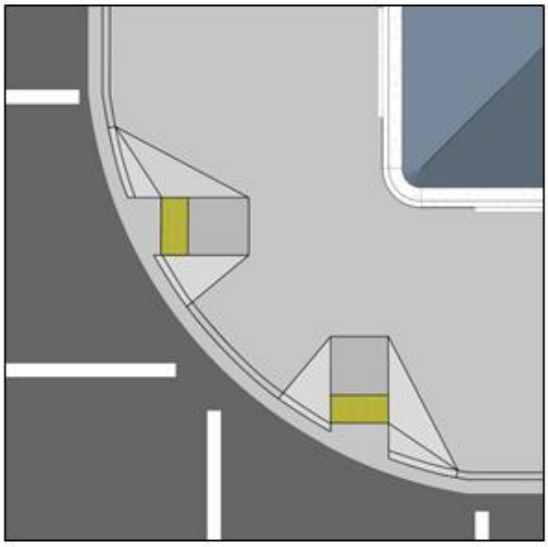

Diagonal Curb Ramps [§406.6]

If curb ramps are placed diagonally at an intersection, it is important that clear space 48” long min. is available at the bottom that is outside active vehicle traffic lanes and is located within marked crossings, where provided. A segment of curb at least 24” long beyond flares must be provided on both sides of curb ramps with side flares within marked crossings. This curb segment provides an orienting cue at crossings for people with vision impairments.

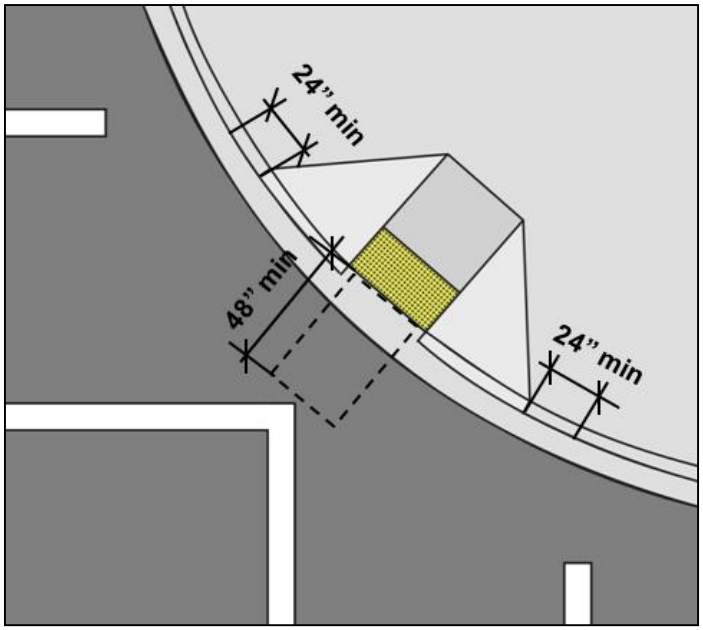

Recommendation: Perpendicular curb ramps are preferred over diagonal curb ramps. Unless the radius is large enough, it can be difficult to locate the clear space at the bottom of diagonal curb ramps that is outside active traffic lanes. The orientation also can mislead people with vision impairments who use curb slopes as a cue to crossings.

Raised Crossings

Raised crossings, where provided, eliminate the need for curb ramps while serving to reduce traffic speeds. Consult local Standards for application requirements, including slope for vehicle traffic, height, and markings.

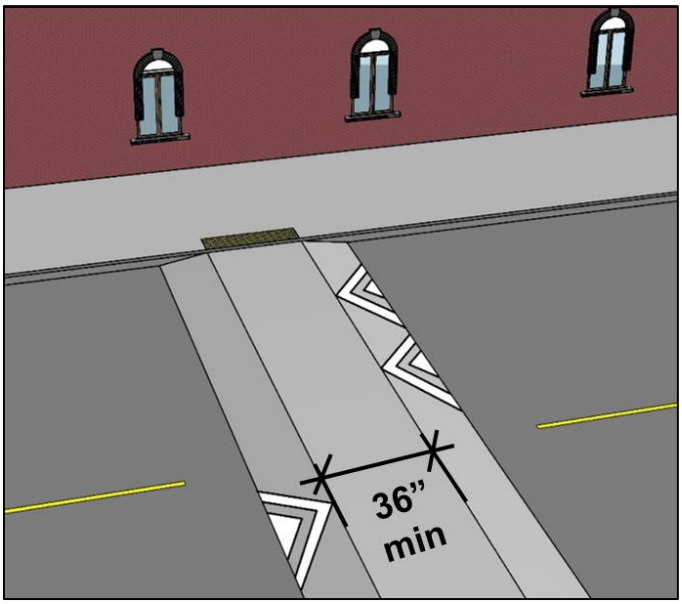

Islands [§406.7]

A 48” min. long separation is necessary between curb ramps so that people using wheelchairs can clear one ramp before negotiating the next. Level cut-throughs provide an effective alternative, especially at narrow islands that will not accommodate opposing curb ramps with a 48” separation.

Island with Curb Ramps

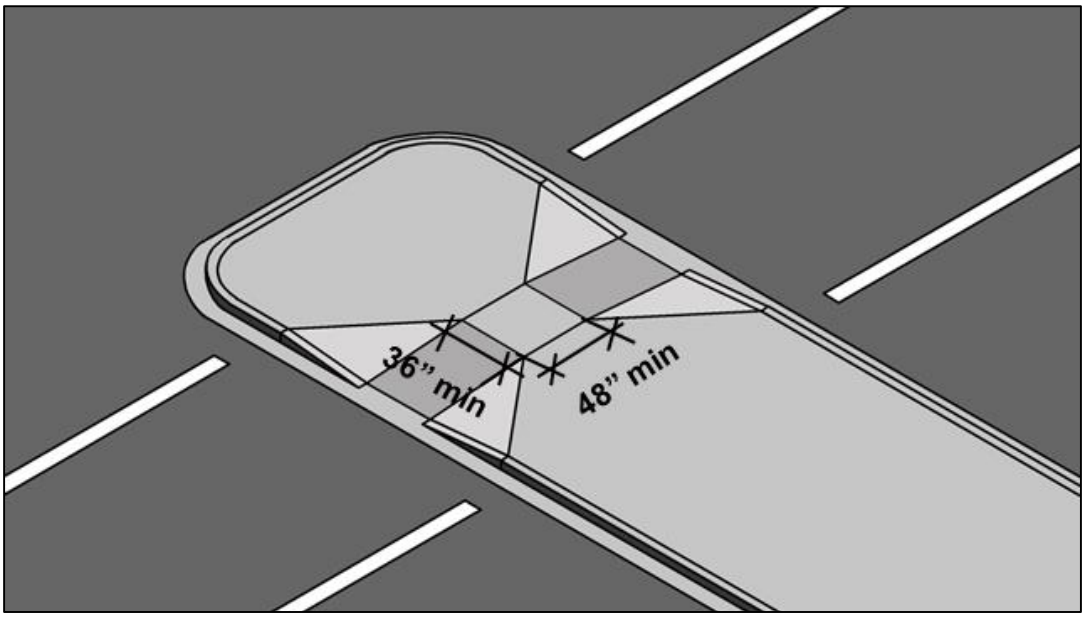

Island with Cut-through

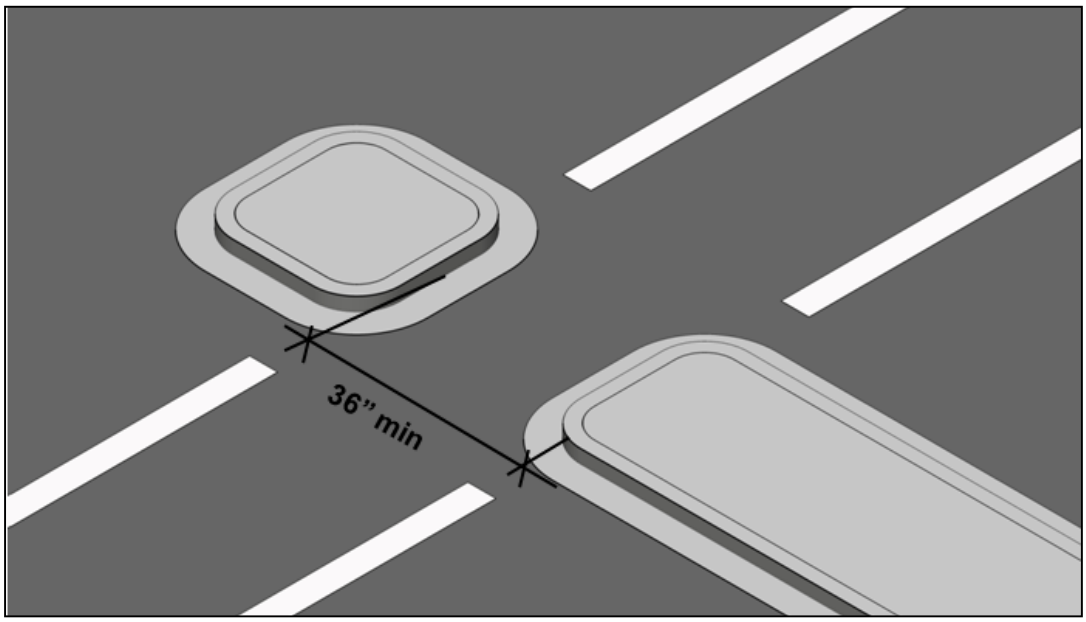

Detectable Warnings [§705]

The ABA Standards do not require detectable warnings on curb ramps. However, they are required on curb ramps at transit facilities covered by DOT's ADA Standards (facilities used by state and local governments to provide designated public transportation services, such as rail stations and bus stations). DOT also requires detectable warnings on curb ramps in projects funded by the Federal Highway Administration. New guidelines the Board is developing for public rights-of-way under the ABA and ADA will address requirements for detectable warnings at curb ramps and other transitions along public streets and sidewalks where hazards to people with vision impairments are greater.

Where detectable warnings are required (or provided anyway) they must meet specifications for size, spacing, and contrast. These detailed criteria provide a distinctive texture intended to have a uniform meaning in alerting persons to the approach to vehicular areas (as well as drop-offs along rail station platforms).

Detectable Warnings on Curb Ramps

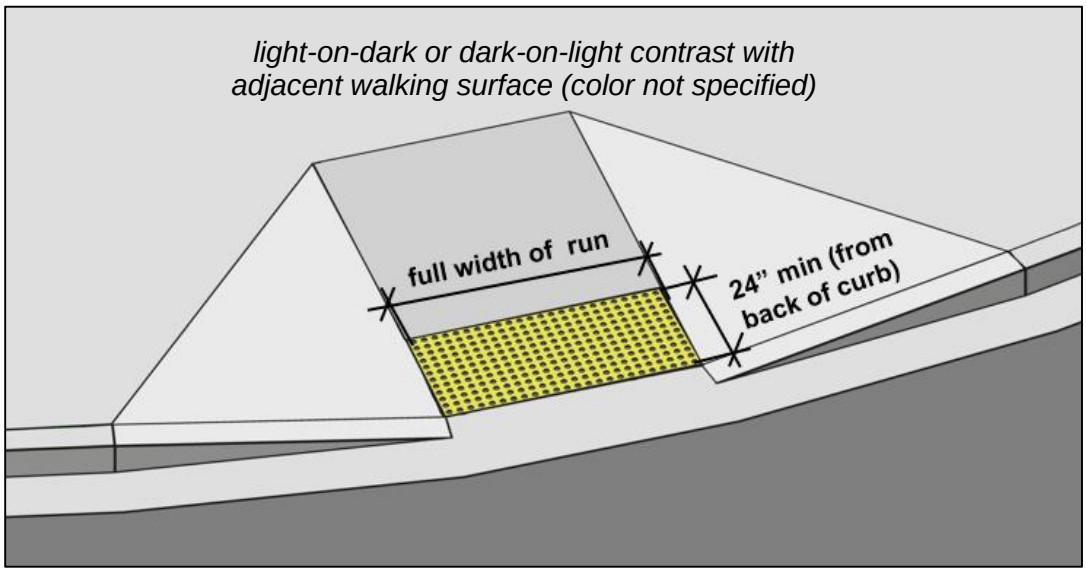

Dome Spacing

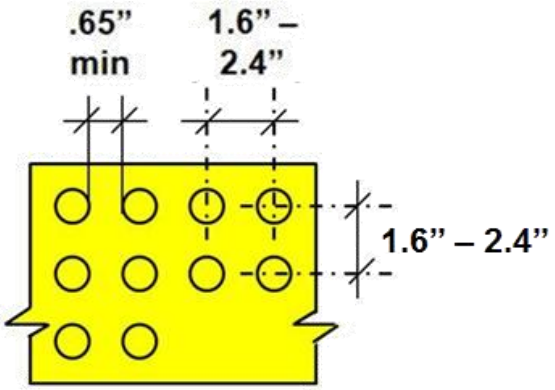

Dome Size

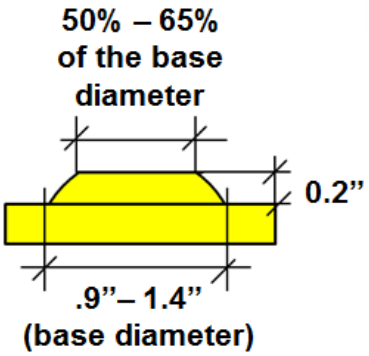

Common Questions

Ramps

Is there a limit on the total length (number of runs) a ramp may have?

No, the Standards limit the rise of each run (30” max.), but not the overall length of ramps comprised of multiple runs. Since the usability of ramps decreases with length, considerably long ramp systems should be avoided where possible. (Ramps in play areas are limited to a 12” max. rise).

Are curved or circular ramps allowed?

Ramps without level landings at changes in direction typically will not meet the Standards due to resulting compound slopes. This includes most circular or curved ramps, unless the radius is large enough so that the cross slope is compliant and compound slopes are avoided. Otherwise, the curvature and slope result in uneven surfaces that makes wheelchair maneuvering difficult because not all wheels rest evenly on the surface.

Can ramps be portable or provided after construction as an adaptation?

All required ramps and curb ramps must be permanent and installed at the time of construction or alteration with few exceptions. Ramps can be provided after construction only to provide access to raised work stations in courtrooms (sufficient space must be provided in design to facilitate installation). Only ramps serving temporary structures can be temporary or portable.

Is there a maximum distance between ramp handrails?

No, only a minimum (36”) is required between handrails. The Standards do not require center or intermediate handrails on wide ramps.

Can handrails overlap ramp landings?

Along runs and landings, the minimum clear width must be measured between the leading edge of handrails. This also applies to landings required to be at least 60” by 60” where ramps change directions so that the minimum landing area remains clear.

Can handrail extensions wrap or turn?

Extensions are not required for continuous handrails along switchback or dogleg ramps or at aisle ramps serving seating in assembly areas. In alterations where the required extension would project hazardously into circulation paths, they can turn, be shorter, or avoided. Otherwise, handrail extensions must be in same direction as the ramp run.

Can handrails be mounted to guard rails?

Yes, handrails can be installed on guard rails if all applicable requirements are met.

Curb Ramps

Why is a top landing required at curb ramps if side flares are provided?

A landing at least 36” long at the top of curb ramps provides room to approach or exit ramps and turn without encountering compound slopes of flared sides. Side flares are intended mainly to prevent tripping hazards. They are not designed to accommodate wheelchair maneuvering except in alterations where space constraints preclude a compliant top landing.

Are side flares required at curb ramps?

The ABA Standards do not require that curb ramps have side flares, but limit the slope (1:10 max.) where they are provided. Side flares are advisable where pedestrian traffic may cross runs to prevent tripping hazards. Side flares are essential in alterations when space for a top landing (36” deep min.) is not available; in this instance, side flares (1:12 max. slope) are necessary to accommodate wheelchair maneuvering that will partially occur at flares in the absence of full landing space at the top unless a parallel-type curb ramp is provided.

Are detectable warnings required on curb ramps or at hazardous vehicular areas?

The ABA Standards require detectable warnings along open drop-offs of rail station boarding platforms, but they do not require detectable warnings on curb ramps or at hazardous vehicular areas. However, DOT’s ADA Standards, which apply to public transportation facilities such as rail stations and bus stations, do require detectable warnings on curb ramps. In addition, DOT requires detectable warnings on curb ramps in projects funded by the Federal Highway Administration. New guidelines for public rights-of-ways issued by the Board under the ABA and ADA will address detectable warnings on curb ramps and other transitions along public streets and sidewalks

Why are detectable warnings no longer required for all curb ramps or at hazardous vehicular areas?

In the last update, the ABA Standards were revised to focus more clearly on facilities located on sites in recognition of separate criteria the Access Board is developing for public rights-of-ways. The public rights-of-way guidelines will address requirements for detectable warnings due to hazards to people with vision impairments along public streets and sidewalks. At facilities located on sites, various measures can help reduce

hazards, including reduced traffic speeds, marked crossings with pedestrian right-of-way, and speed-bumps, and other optional traffic calming measures.