Accessible Means of Egress

This guide explains requirements in the ADA Standards and referenced sections of the International Building Code (IBC) and was developed in cooperation with the International Code Council.

Required Compliance with the IBC [§207]

Accessible means of egress must be provided according to the International Building Code (IBC). Issued by the International Code Council (ICC), the IBC addresses the number of means of egress required and technical criteria for them, including fire–resistance rating, smoke protection, travel distance, width, and other features. The Standards currently apply the IBC 2003 edition or the 2000 edition and 2001 supplement. The Access Board plans to update these references. Compliance with a later edition may be possible under the provision for "equivalent facilitation" (§103) if it is comparable to, or stricter than, the referenced editions.

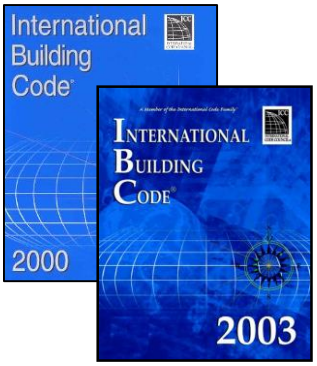

Further information on the IBC is available from the, International Code Council (ICC) at (888) 422-7233) or www.iccsafe.org.

Means of Egress

A means of egress is an unobstructed path to leave buildings, structures, and spaces. A means of egress is comprised of exit access, exit, and exit discharge.

Components of a Means of Egress

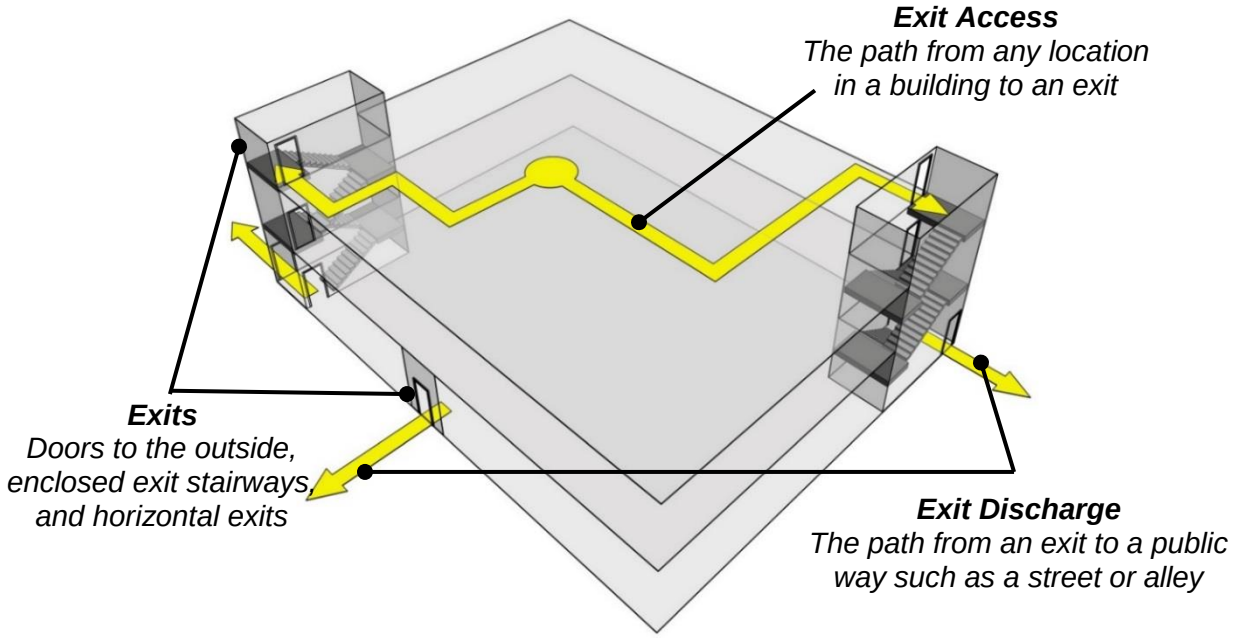

Required Means of Egress [IBC §1007.1 (2003), §1003.2.13 (2000)]

The IBC requires at least two means of egress from all spaces and buildings with few exceptions. Some spaces and buildings are allowed to have one means of egress if the travel distance to an exit is short and the occupant load is low. For example, a business occupancy with no more than 30 occupants and a maximum exit access travel distance of 75 feet is permitted to have a single means of egress. More than two means of egress are required where the occupant load is 500 or more (at least 3) and 1,000 or more (at least 4). The IBC requirements for accessible means of egress apply to new construction; accessible means of egress are not required to be added in alterations to existing facilities.

An accessible means of egress, as defined by the IBC, is a "continuous and unobstructed way of egress travel from any point in a building or facility that provides an accessible route to an area of refuge, a horizontal exit, or a public way." Where more than one means of egress is required from any accessible space, each accessible portion of the space must be served by at least two accessible means of egress. Accessible spaces can be served by one accessible means of egress only where the IBC permits one means of egress.

Accessible Means of Egress

Accessible spaces must be served by at least two accessible means of egress with few exceptions. Accessible means of egress must extend from all accessible portions of a room or space. The IBC specifies maximum travel distances to reach an exit.

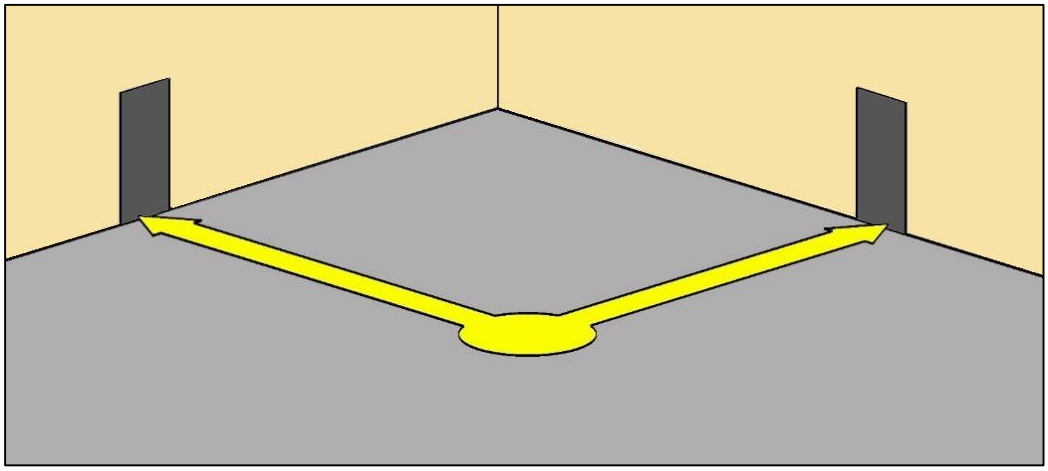

Accessible means of egress can share a common path of egress travel as allowed for means of egress by the applicable building or life safety code (§207.1).

The IBC (2003) permits one accessible means of egress from:
- *wheelchair seating in assembly areas with sloped floors where the common path of travel meets aisle requirements for assembly areas and*
- *mezzanines served by an enclosed exit stairway or elevator equipped with standby power.*

Exit Access on Floors Above (or Below) the Level of Exit Discharge

On floors above or below the level of exit discharge, accessible means of egress must lead to exit stairways, horizontal exits, or to elevators equipped with standby power. These are locations where those unable to use stairs can await assisted rescue by emergency responders. It is standard operating procedure for emergency responders to check these locations first for anyone needing assistance.

Accessible Means of Egress Leading to Exit Stairs

On floors above or below the level of exit discharge, accessible means of egress typically lead to exit stairways.

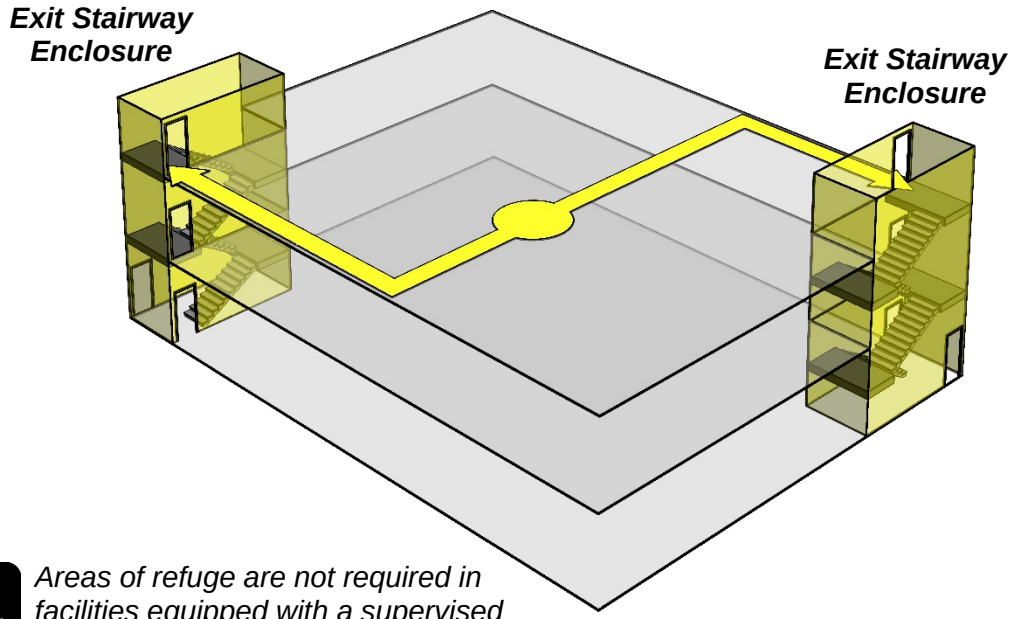

Areas of refuge are not required in facilities equipped with a supervised automated sprinkler system.

Areas of Refuge

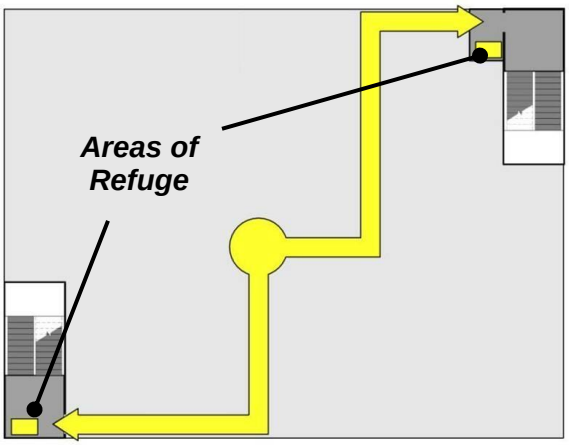

Areas of refuge, which are required in buildings that are not equipped with sprinkler systems, provide fire and smoke protected areas where those unable to use stairs can register a call for help and await evacuation assistance. These areas must provide direct access to exit stairways and can be located adjacent to stairway enclosures or on stair landings outside the minimum exit width.

Exit Stairway Enclosures [IBC §1007.3 and 1019 (2003), §1003.2.13.2 and 1005.3.2 (2000)]

The IBC contains requirements for exit stairway enclosures that address fire-resistance and smoke protection, stairways and handrails, signs, and other features. The ADA Standards apply requirements for stairways to each stair that is part of a required means of egress (§210).

Exit Stairway Enclosures

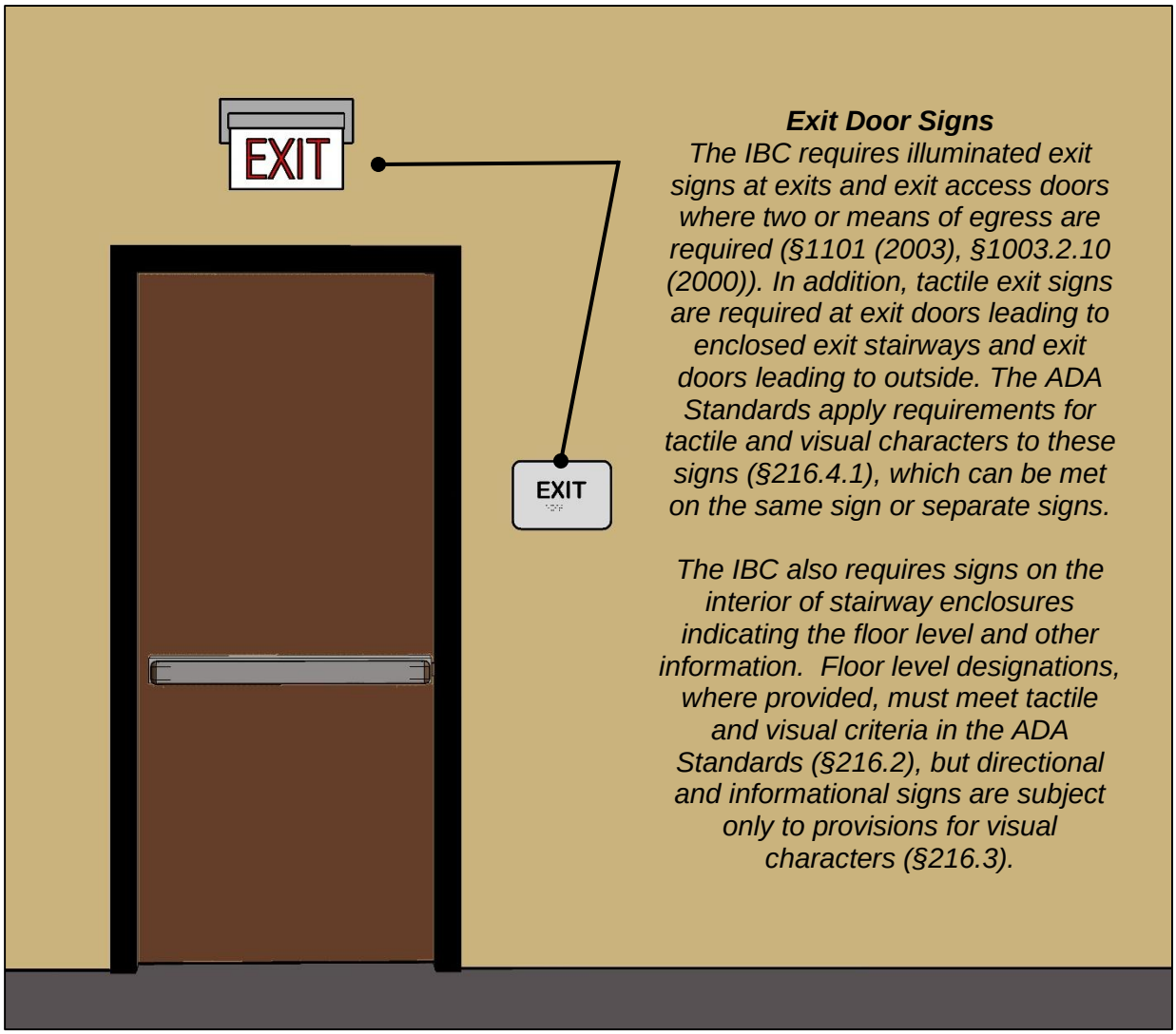

Exit Door Signs

The IBC requires illuminated exit signs at exits and exit access doors where two or means of egress are required (§1101 (2003), §1003.2.10 (2000)). In addition, tactile exit signs are required at exit doors leading to enclosed exit stairways and exit doors leading to outside. The ADA Standards apply requirements for tactile and visual characters to these signs (§216.4.1), which can be met on the same sign or separate signs.

The IBC also requires signs on the interior of stairway enclosures indicating the floor level and other information. Floor level designations, where provided, must meet tactile and visual criteria in the ADA Standards (§216.2), but directional and informational signs are subject only to provisions for visual characters (§216.3).

Door and Gates

The IBC covers doors and gates serving means of egress (§1008 (2003), §1003.3.1 (2000)). The ADA Standards permit fire doors to have the minimum opening force specified by the applicable life safety code instead of the 5 lbf maximum otherwise specified for interior hinged doors (§404.2.9).

Stairways [ADA Standards §210, §504]

Stairways and handrails that are part of a means of egress are addressed by the IBC (§1009 (2003), §1003.3.3 (2000)). In addition, interior and exterior stairs that are part of a means of egress must comply with requirements in the ADA Standards (§504).

In alterations, stairs between levels that are connected by an accessible route (e.g., ramp or elevator) are not required to meet the ADA Standards, but handrails must comply when the stairs are altered (§210.1, Ex. 2).

Treads and Riser Specifications in the ADA Standards (§504)

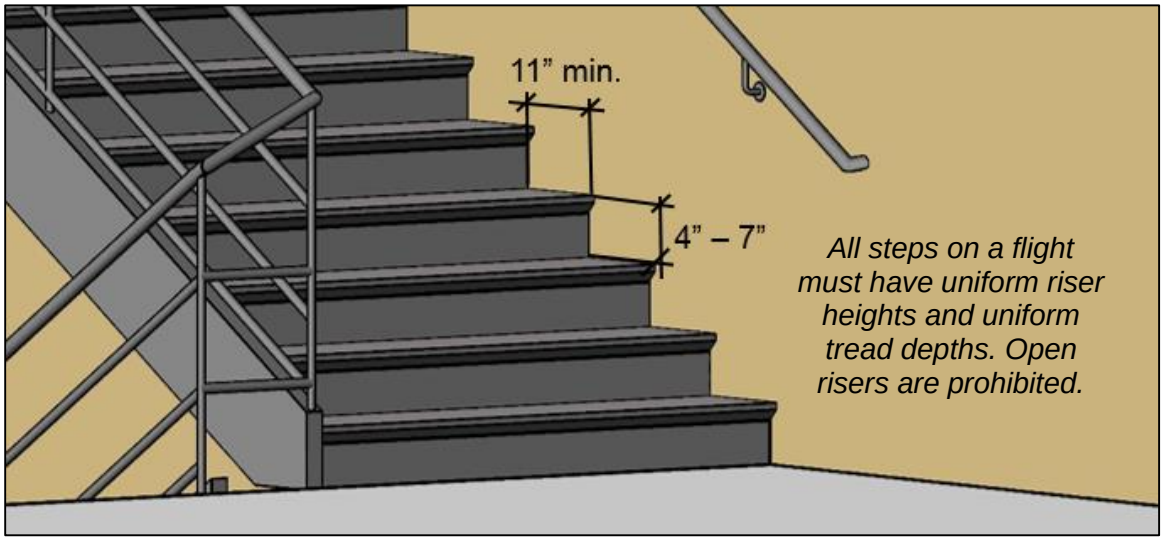

Treads and landings subject to wet conditions must be designed to prevent the accumulation of water. Visual contrast on tread nosings or the leading edges of treads is helpful for people with low vision but not required by the ADA Standards.

Nosing Specifications

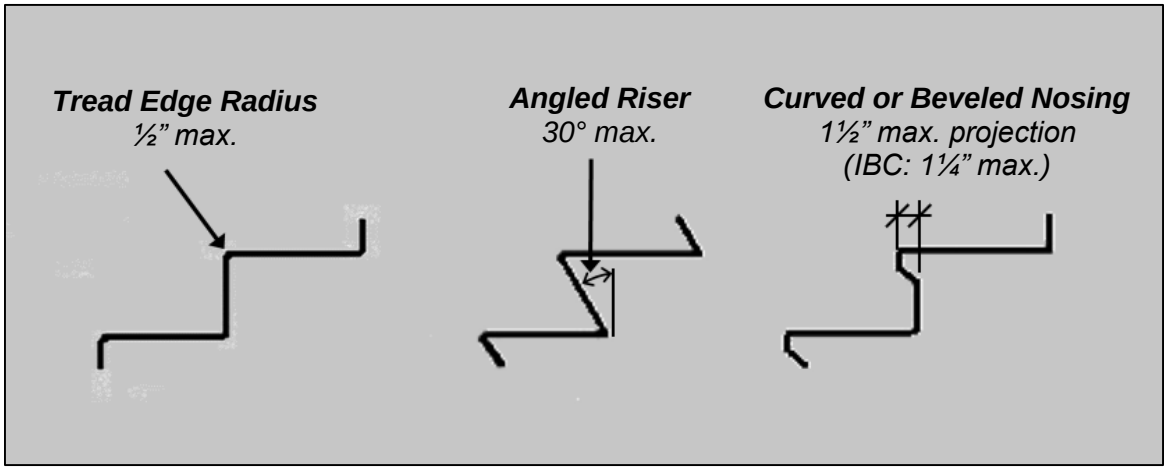

Stairway Handrails Requirements in the ADA Standards (§504)

Handrails are required on both sides and must be continuous within the full length of each stair flight.

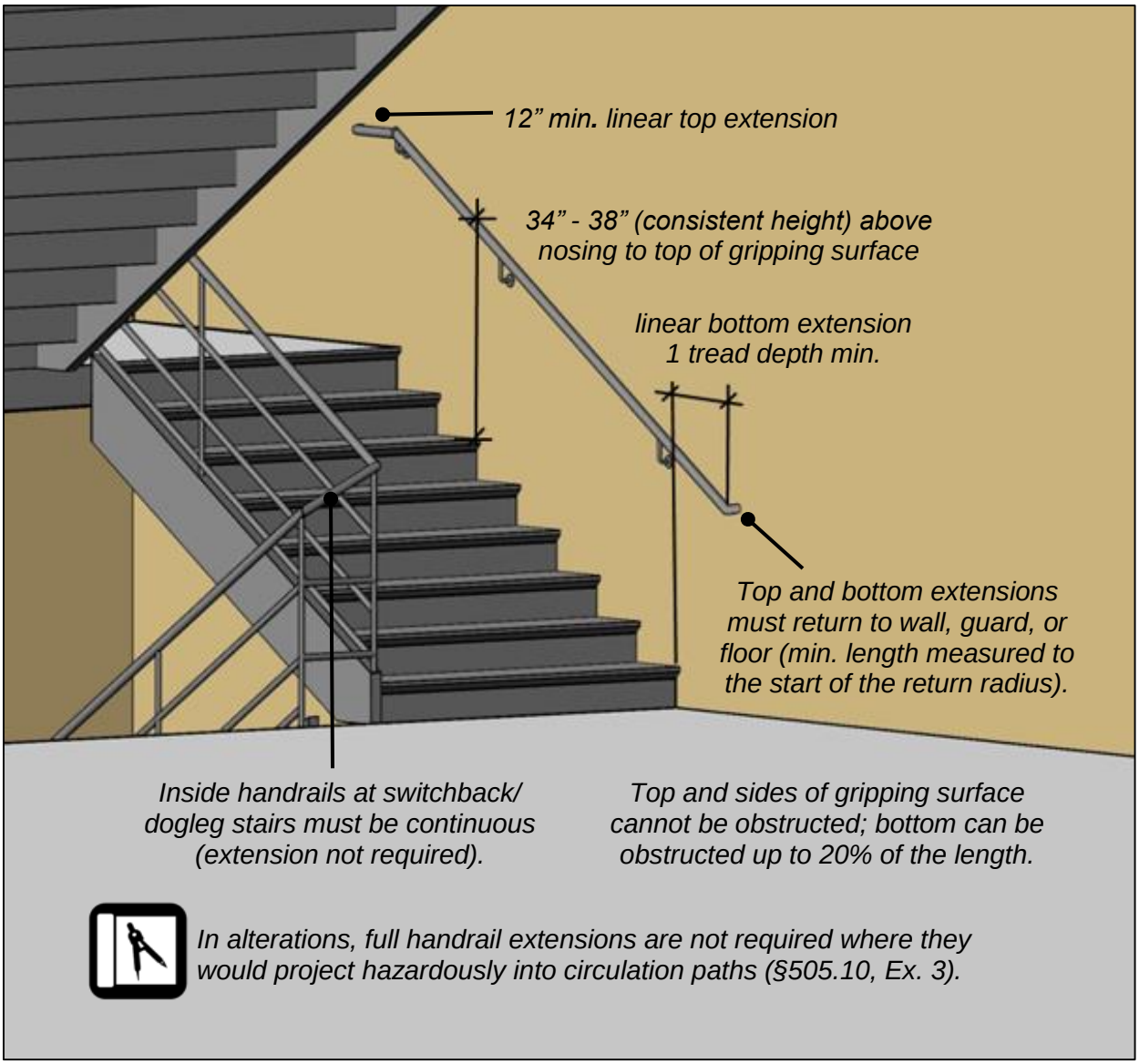

Protruding Objects

The ADA Standards address hazards posed by protruding objects, such as standpipe valves, along circulation paths, including stairways and inaccessible routes (§204). The standards limit the protrusion of objects with leading edges that are above 27" high and no more than 80" high. Such objects are limited to a 4" protrusion into circulation paths, but a 4 ½" protrusion is allowed for handrails. Protrusions up to 12" are specified for objects mounted on posts or pylons (§307).

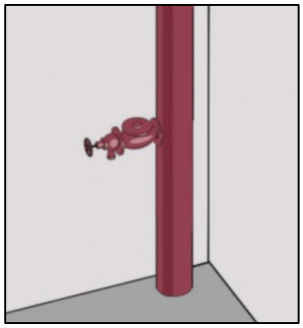

Handrails [ADA Standards §504.6, §505]

Specifications in the ADA Standards for handrail surfaces and clearances facilitate a power grip along the handrail length. Handrails can have circular or non-circular cross-sections. The gripping surface and adjacent surfaces must be free of abrasive or sharp elements. Handrails cannot rotate within fittings. The IBC also includes requirements for stairway handrails (§1009 (2003), §1003.3.3 (2000)).

Circular Cross Section and Clearance (§505.5, §505.7)

Specifications for handrails also address the diameter of circular cross sections and required knuckle clearance.

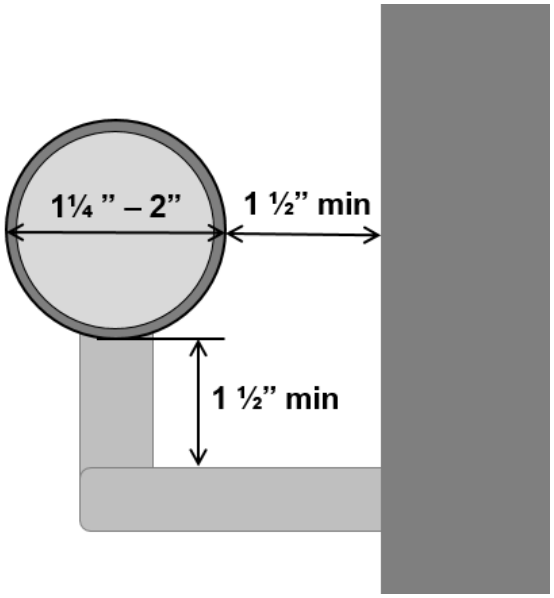

Non-Circular Cross Section and Clearance (§505.5, §505.7)

Non-circular cross sections must have rounded edges and meet perimeter and cross-section dimensions. Other profiles meeting these criteria are permitted.

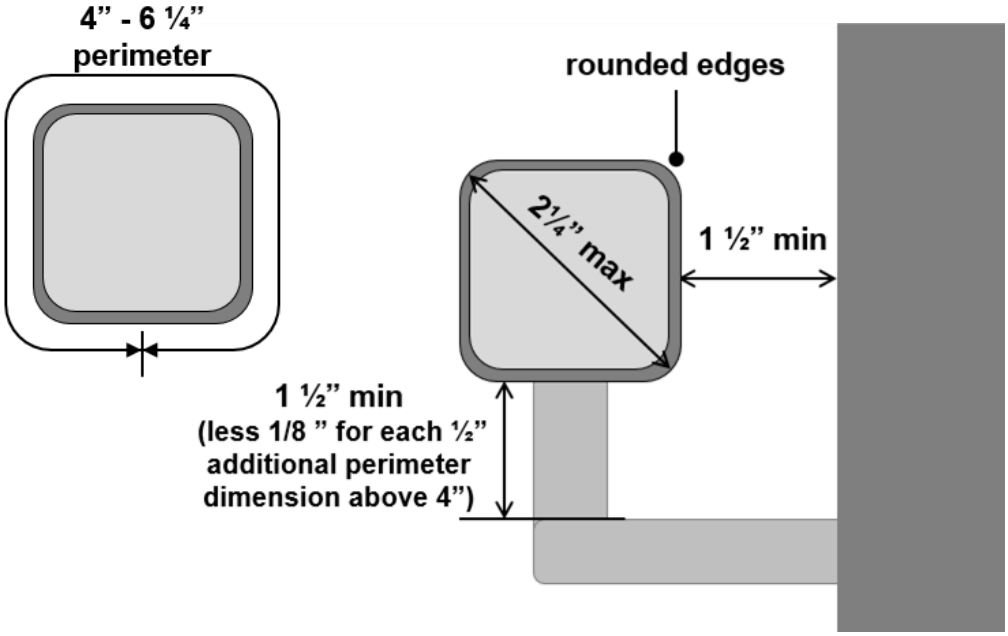

Areas of Refuge [IBC §1007.6 (2003), §1003.2.13.5 (2000)]

Areas of refuge are fire-resistance rated and smoke protected areas where those unable to use stairs can register a call for evacuation assistance and await instructions or assistance. They must provide direct access to an exit stairway (or to an elevator equipped with standby power). Horizontal exits can substitute for areas of refuge.

Features of Areas of Refuge

Instructions
The IBC requires posted instructions on use of the area under emergency conditions next to the communication system and specifies required content. These instructions must meet requirements for visual characters in the ADA Standards (§216.4.2, §703.5).

Two-Way Emergency Communication System
Devices must include audible and visual signals and connect to a central control point (and to a public telephone system if the central control point is not constantly attended) under the IBC. Their location must be approved by the fire department. Operable parts are subject to the ADA Standards (§309).

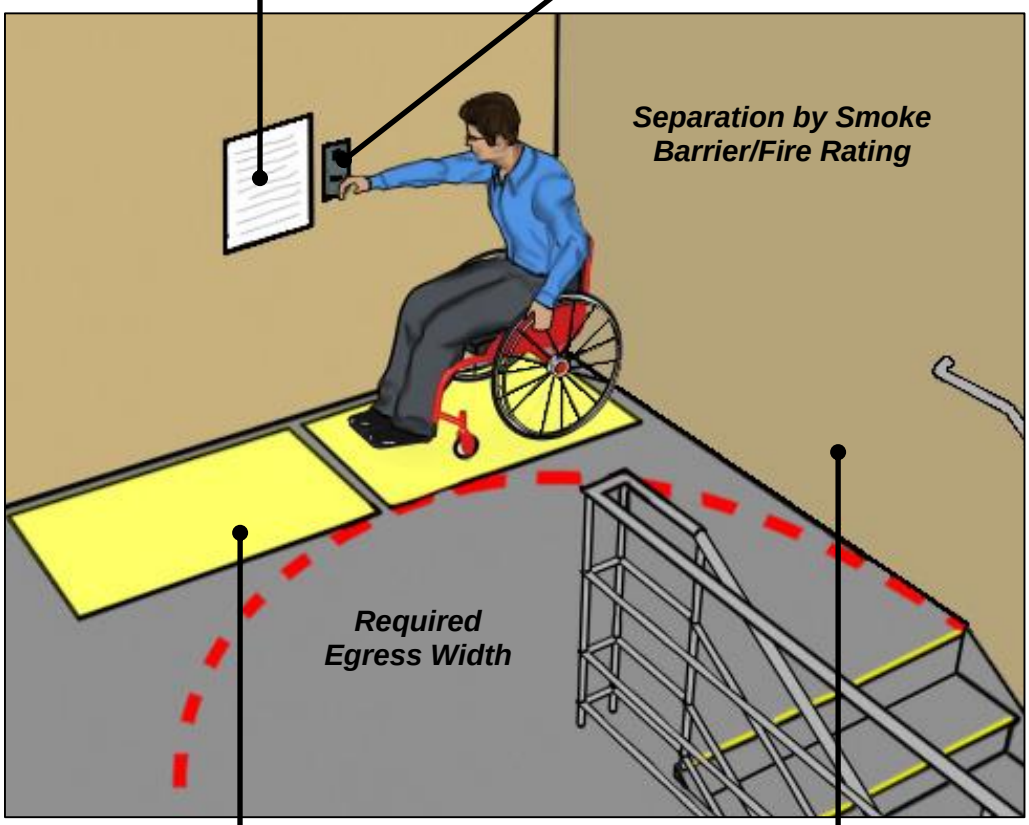

Wheelchair Spaces
The IBC requires 1 wheelchair space (30" min. by 48" min.) for every 200 occupants or portion thereof served by the area of refuge. Spaces cannot reduce the required egress width and must be entered directly from an accessible route or one adjacent wheelchair space.

Stairway Width
The IBC requires stairs serving areas of refuge to have a clear width of 48" min. between handrails to accommodate assisted evacuation.

Area of Refuge Identification [IBC §1007.6.5 (2003), §1003.2.13.5.5 (2000)]

The IBC requires that doors providing access to areas of refuge be identified by a sign that includes the term "AREA OF REFUGE" and the International Symbol of Accessibility (ISA). Both the IBC and the ADA Standards apply requirements for tactile and visual characters to the area of refuge signs.

Sample Area of Refuge and Exit Sign

The ISA must be included on signs labeling areas of refuge but does not have to be raised.

Area of refuge signs can be incorporated into required exit signs. Requirements for tactile signs address raised characters, braille, finish and contrast, separation from raised borders, and location (i.e., 48" – 60" AFF measured to the baseline of raised characters), and other features.

Requirements for visual characters also apply and can be met on the same sign or a separate sign, including the illuminated sign required by the IBC. Under the IBC, the area of refuge sign must be illuminated where exit sign illumination is required

Instructions [IBC §1007.6.4 (2003), §1003.2.13.5.4 (2000)]

The IBC requires signs in areas of refuge with two-way communication that provide:

- *Instructions on how to use the communication system under emergency conditions*
- *Directions to other means of egress*
- *Indication that persons able to use the exit stairway are to do so as soon as possible, unless they are assisting others*
- *Information on the planned availability of assistance in the use of stairs or supervised operation of elevators and how to summon such assistance*

These signs must meet requirements in the ADA Standards for visual characters (§216.4.2)

Areas of refuge are not required in facilities that are equipped throughout with an automated sprinkler systems in compliance with the IBC. Sprinkler systems suppress or control fires, and also pinpoint their location, making response more efficient and timely. In addition, areas of refuge are not required in open parking garages, apartment buildings, detention and correctional facilities, or open exit stairways between floors in buildings with sprinkler systems meeting the NFPA 13 Standard.

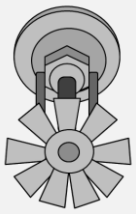

Horizontal Exits [IBC §1021 (2003), §1005.3.5 (2000)]

A horizontal exit compartmentalizes a building allowing occupants to exit the area containing the origin of a fire into another portion of the building that is protected by fire-resistance-rated assemblies (doors, walls, ceilings, and floors). A horizontal exit separates a space into two exit access areas. IBC requirements for horizontal exits address fire-rated separation, opening protectives, capacity, and other features.

Horizontal Exit

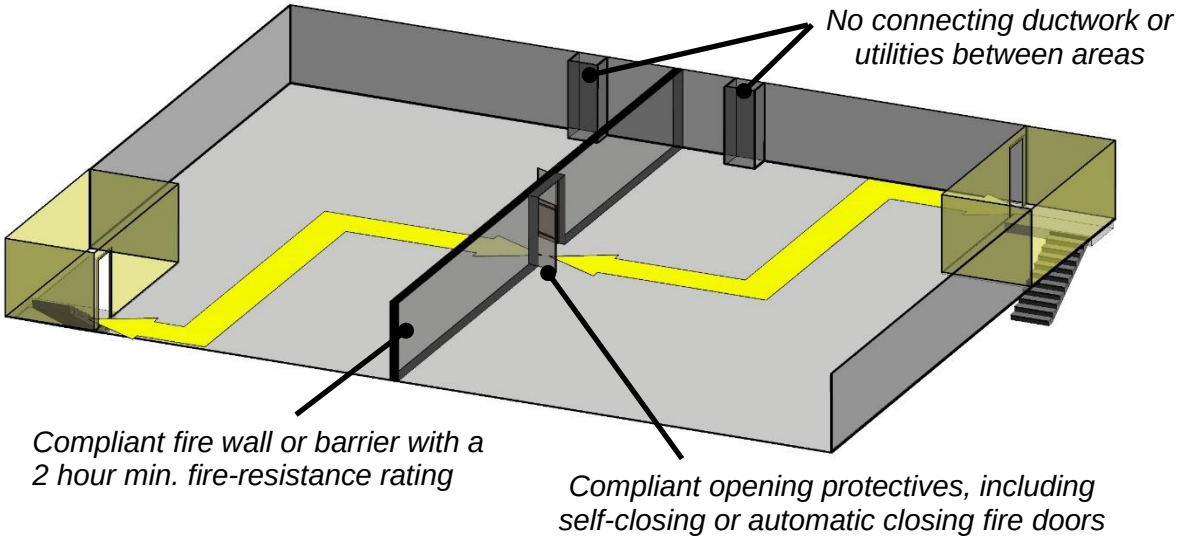

Horizontal Exit and Enclosed Exit Stairways

No more than half the required exits can be horizontal exits. At least one exit must lead directly to an exit enclosure or to the exterior.

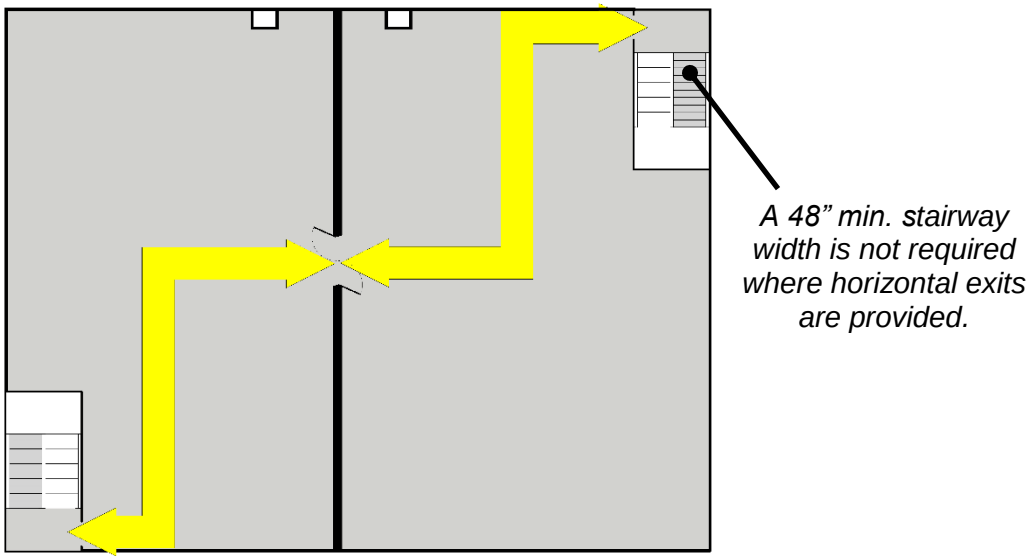

Elevators with Standby Power [IBC §1007.4 (2003), §1003.2.13.3 (2000)]

In buildings with four or more stories above or below the level of exit discharge, at least one accessible means of egress must be an elevator with standby power and emergency signaling devices. Designed to remain operational even when regular electrical service is lost, they are used by emergency responders to move personnel and fire-fighting equipment and to provide assisted rescue. Like all elevators, they are not to be used independently by building occupants in emergencies.

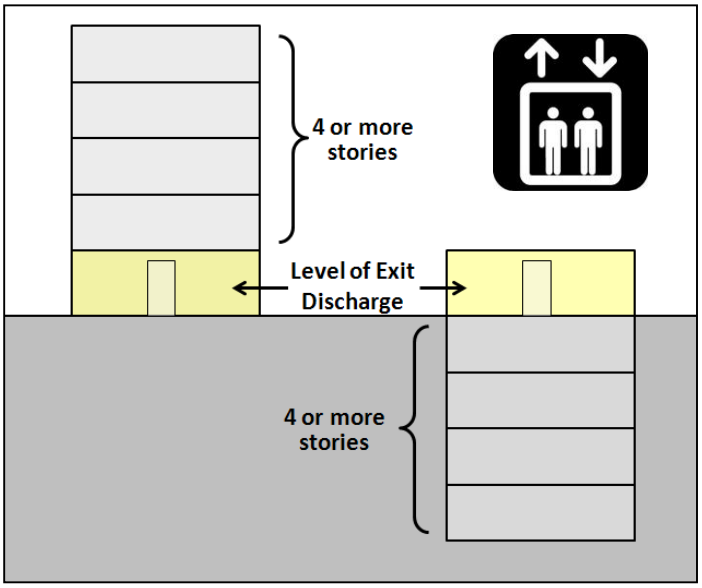

Only one of two accessible means of egress can contain an elevator with standby power

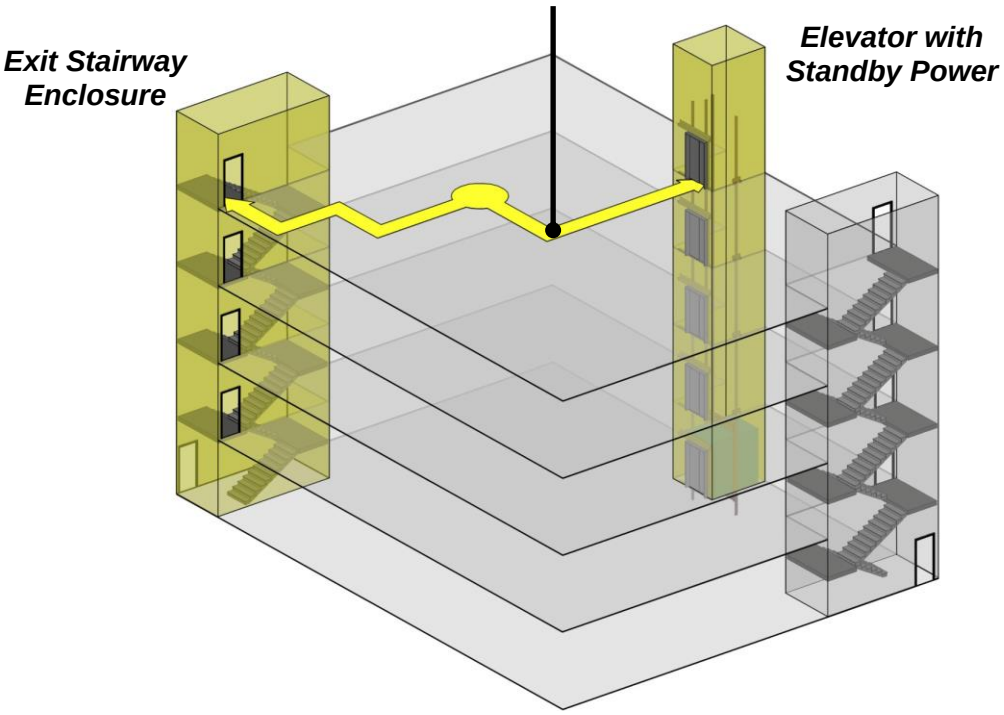

In sprinklered buildings, an elevator with standby power is not required on floors with either a:

- *horizontal exit (excluding floors below the level of exit discharge)*
- *a compliant exit access ramp*

Exit Discharge [IBC §1023 (2003), §1006 (2000)]

Accessible means of egress must connect exits to a public way, such as a street or alley (i.e., space permanently deeded and dedicated to public use).

Exit Discharge

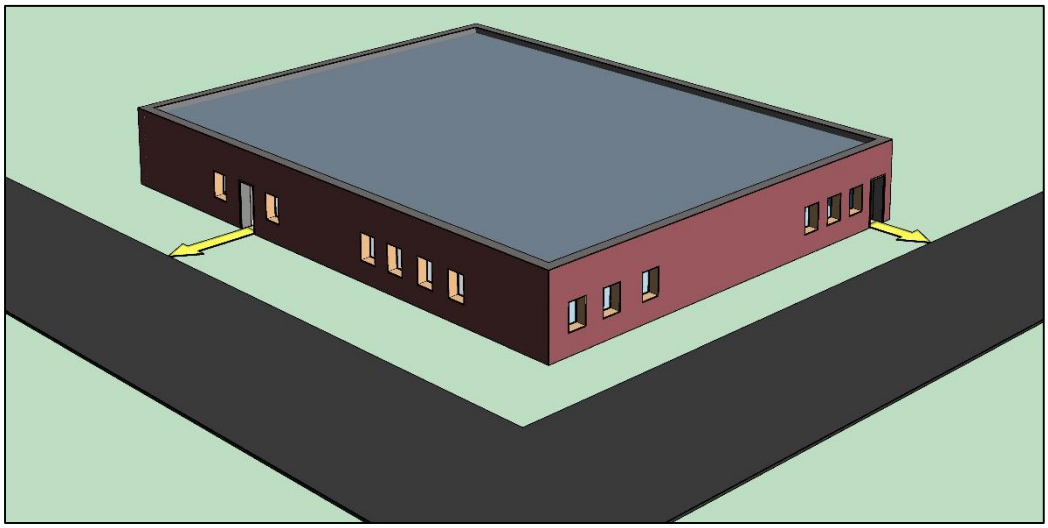

Exit discharge is the path from an exit to a public way

Steep terrain and other constraints can make it difficult to provide an accessible means of egress from building exits to a public way. The IBC permits an exterior area for assisted rescue, a protected area immediately outside a building exit, where a connecting accessible route to a public way from the level of exit discharge is not practicable. Alternatively, an interior area of refuge can be provided at exits. When used as an alternative to an accessible route from exit discharge to a public way, they must be provided, including in buildings that are sprinklered.

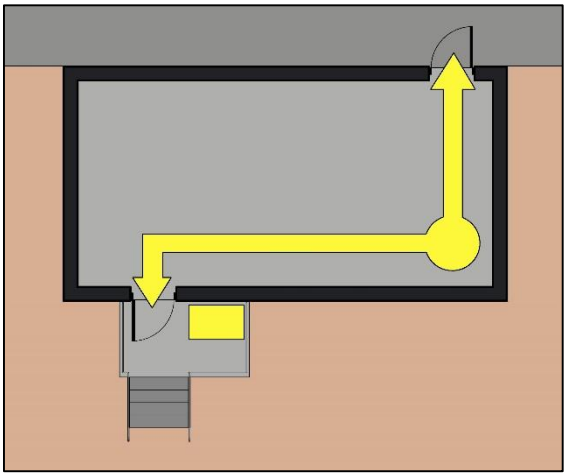

Exterior Area for Assisted Rescue

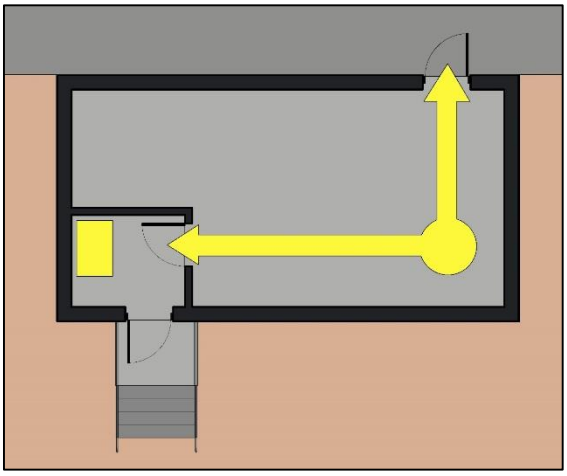

Interior Area of Refuge at Exit

Exterior Area for Assisted Rescue
[IBC§1007.8 (2003), §1003.2.13.7 (2000)]

Openness
Area must be at least 50% open to minimize accumulation of smoke or toxic gases.

Fire-rated Separation
One hour min. fire-rated separation within 10' (horizontal and vertical) of the exterior area of assisted rescue (3/4 hour rating for opening protectives within this area).

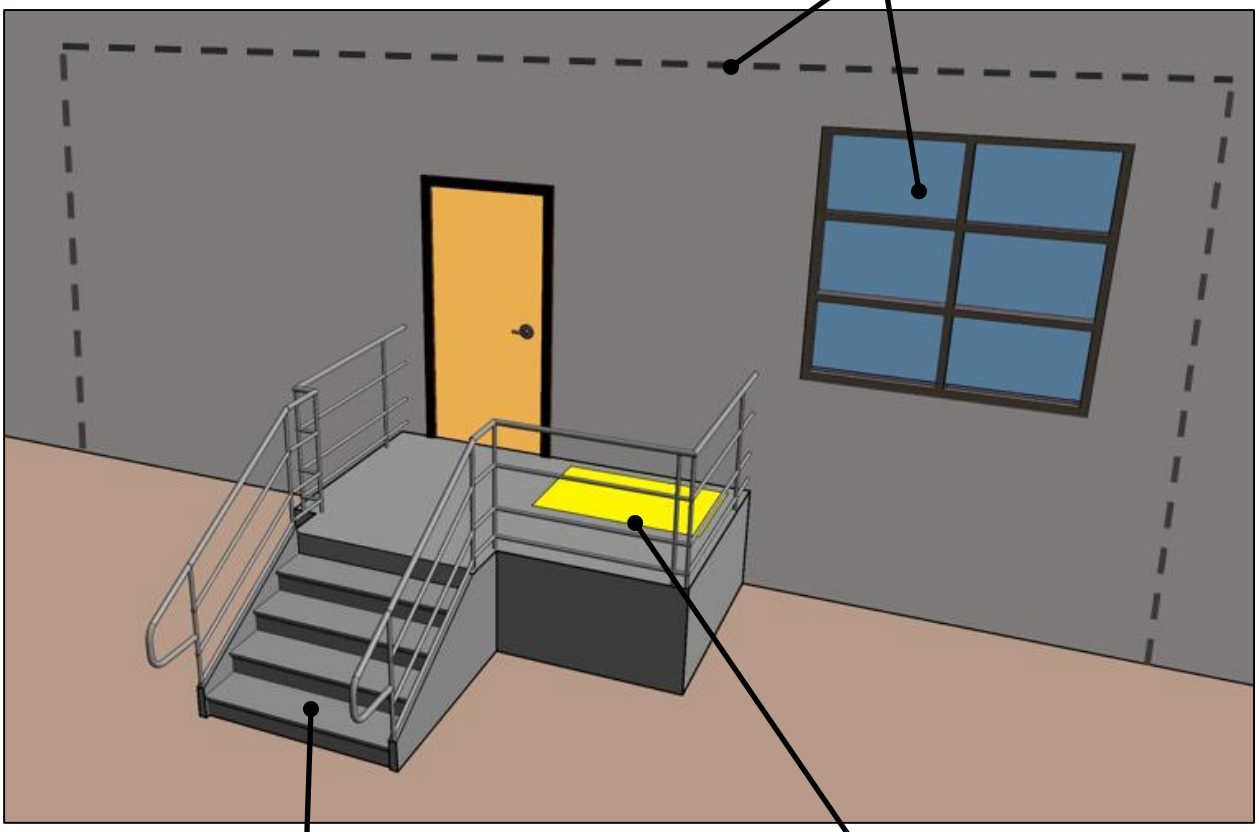

Exterior Exit Stairway
48" min, clear width between handrails

Wheelchair Space
1 space (30" min. by 48" min.) for every 200 occupants or portion thereof served by the exterior area for assisted rescue. Spaces cannot reduce the required egress width and must be entered directly from an accessible route or one adjacent wheelchair space.

Identification
Visual and tactile sign: "AREA OF REFUGE" with International Symbol of Accessibility located at door (interior side) leading to exterior area for assisted rescue.

Signs [ADA Standards §216, §703]

The ADA Standards cover tactile and visual features of signs, including those that serve means of egress. Only certain signs are subject to requirements for tactile and visual access, while a broader range is subject to the visual criteria only. Tactile signs must include compliant raised characters and braille characters and be located at doors 48" to 60" above the floor or ground (§703.2). Visual criteria address the height, style, proportion, and spacing of characters, as well as finish and contrast, line spacing, and other features (§703.5). Tactile and visual requirements can be met on the same sign or on separate signs.

Tactile and Visual Signs [ADA Standards §216.2, §216.4.1]

The IBC requires exits and exit access doors to be marked by illuminated exit signs (§1011, §1003.2.10). In addition, the IBC requires a tactile "EXIT" sign adjacent to the door to an egress stairway, an exit passageway, and the exit discharge (§1011.3, §1003.2.10.3 – 2000 addresses doors to egress stairways only). The ADA Standards include a similar requirement for visual and tactile exit signs at doors at exit stairways, exit passageways, and exit discharge (§216.4.1). (An exit passageway is a horizontal component of an exit that is separated from interior building spaces by fire-resistance-rated construction that leads to the exit discharge or public way.)

The ADA Standards also require that signs identifying "permanent rooms and spaces" meet tactile and visual criteria (§216.2). This requirement applies to signs identifying stairways, floor levels, and areas of refuge.

Examples of Signs Required to Meet Tactile and Visual Criteria

Exit signs (located at exits) and signs identifying permanent spaces, such as stairways, floor levels, and areas of refuge, are required to meet tactile and visual criteria. Signs providing direction to such spaces and to exits must comply as visual signs, but not as tactile signs. Instructional content included on signs, such evacuation instructions, also must meet visual criteria but not those for tactile characters.

Visual Signs [ADA Standards §216.3, §216.4.2, §216.4.3]

Signs providing direction to, or information about, interior rooms and spaces must meet visual criteria in the ADA Standards, but are not required to be tactile (§216.3). This requirement applies to information about spaces, such as rules of conduct and evacuation instructions, exit route maps, and directional signs to exits and other elements and spaces.

The ADA Standards specifically apply these requirements to signs providing directions to accessible means of egress required by the IBC (§1007.7 (2003), §1003.2.13.6 (2000). The IBC requires that such signs be provided at elevators serving accessible spaces and those exits that do not provide an accessible means of egress. Other directional egress signs provided, including egress route maps, also must meet requirements for visual signs in the ADA Standards. In addition, the ADA Standards apply the visual criteria to posted instructions in areas of refuge required by the IBC (§216.4.2).

Examples of Signs Required to Meet Visual Criteria Only

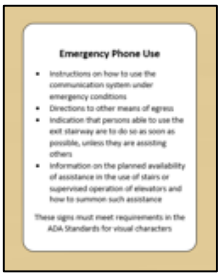

Visual criteria, but not tactile criteria, apply to directional signs, informational signs, rules of conduct signs, and posted instructions.

Pictograms and Symbols of Accessibility [ADA Standards §216.2, §703.6, §703.7]

Where pictograms are provided to *identify a permanent room or space*, such as a stairway, they must include text descriptors that comply with requirements for raised characters and braille (§216.2). In addition, the pictogram must meet finish and contrast criteria and be located on a field at least 6” high.

Pictograms that provide information about a room or space, including the International Symbol of Accessibility (ISA), or that are included on directional signs must comply with requirements for finish and contrast but are not required to include the verbal equivalent in raised and braille characters or to be located on a 6” minimum high field. The ISA and other required accessibility symbols must comply with the specified symbol referenced in the ADA Standards.

Sign with Pictogram that Identifies Permanent Room or Space

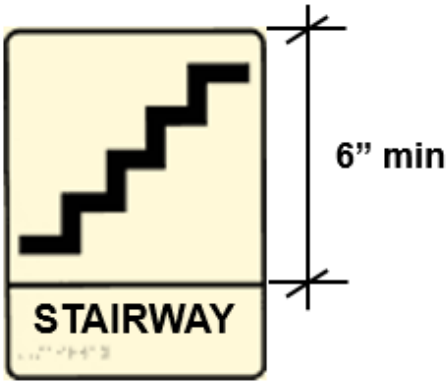

Text descriptor in raised and visual characters with braille

Compliant finish and contrast

Pictograms that provide information about a space or that are included on directional signs must meet finish and contrast requirements but are not required to have text descriptors or to be located on a 6” min. high field. The ISA must conform to the illustration in the ADA Standards (§703.7.2.1).

Other Requirements in the ADA Standards

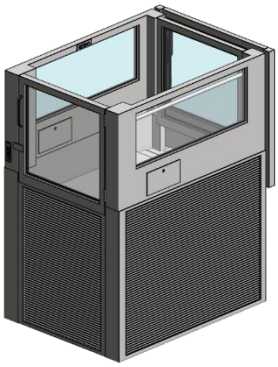

Platform Lifts
Platform lifts, where permitted on an accessible means of egress, must have standby power (§207.2).

Fire Alarm Systems
Where fire alarms systems are provided, they must meet requirements for audible and visual features in the ADA Standards and the referenced NFPA 72 Fire Alarm Code (§215).

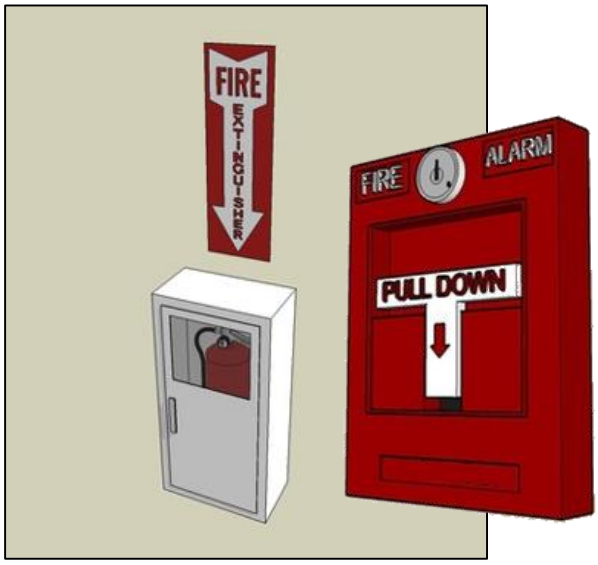

Operable Parts
Operable parts used by building occupants, including alarms pulls and hardware for fire extinguisher cabinets, must comply (§205, §309). They must be usable with one hand and without tight grasping, pinching, or twisting of the wrist, or more than 5 pounds of force. Non-fixed elements, such as fire extinguishers, are not subject to the ADA Standards.

Automated Doors
Maneuvering clearance is required on the egress side of automated doors unless they are equipped with standby power or they stay open in power-off mode (§404.3.2). The standards also require a minimum 32" break out opening for doors unless equipped with standby power or a compliant manual swinging door also serves the same means of egress (§404.3.6).

Fire Safety Evacuation Planning

Fire safety evacuation planning is a critical component of life safety. Evacuation plans and procedures should address the needs of all facility occupants, including those with disabilities. Various products are available that can facilitate assisted evacuation of people with disabilities in emergencies. Mobility aids, such as emergency stair travel devices, also known as evacuation chairs, are available to transport people unable to use stairs. These devices are designed with rollers, treads, and braking mechanisms that enable a person to be transported down stairs with the assistance of another person. The Rehabilitation Engineering and Assistive Technology Society of North America (RESNA), www.resna.org, has developed consensus Standards for emergency stair travel devices through the American National Standards Institute (RESNA ED-1:2013 – American National Standard for Evacuation Devices – Volume 1: Emergency Stair Travel Devices Used by Individuals with Disabilities). It is important that evacuation chairs be located so that they do not obstruct required means of egress.

Common Questions

Are exit doors usable only in one direction required to comply on both sides?

Under the ADA Standards, compliance is not required on both sides of those doors or gates that can be used in one direction only, such as exit-only doors. Compliance is required only on the usable side. However, if a door or gate is usable in both directions, even occasionally, such as exit-only doors that may automatically unlock in emergencies to be usable from both directions, then compliance on both sides is required.

Can stair handrail extensions overlap door maneuvering clearances?

No, handrails and other elements cannot overlap door maneuvering clearances. However, the door maneuvering clearance can be offset up to 8” from the face of the door to accommodate wall thickness, casework, handrails, moldings, and other elements at doorways.

Are fire extinguishers required to comply with the ADA Standards?

In general, elements that are not fixed or built in, including fire extinguishers, are not required to comply with the ADA Standards. (However, non-discrimination provisions in regulations issued under the ADA may be pertinent to the usability of equipment and furnishings by people with disabilities.) The ADA Standards apply to fixed elements, such as a fire extinguisher cabinet, and require compliance with applicable requirements, including those for operable parts and storage. Fire hose cabinets and other elements used only by fire fighters are not required to comply.

Do limits on protruding objects apply to stairways?

Yes, requirements for protruding objects are not limited to accessible routes and apply to all circulation paths, including stairways and their landings.

When door vision lights are limited to 100 square inches by the fire code, is compliance with the specified maximum height of 43" to the bottom edge still required?

Yes. The Standards do not exempt such doors from the requirement for vision lights (§404.2.11). However, compliance is not required when the lowest part of the vision light is more than 66" from the finish floor or ground.

Do requirements of accessible means of egress apply to employee work areas?

Yes, requirements for accessible means of egress apply to employee work areas. The ADA Standards (§203.9) require that employee work areas "be designed and constructed so that individuals with disabilities can approach, enter, and exit the employee work area" and apply requirements for accessible means of egress (§207.1) to employee work areas. Employee work areas also must include wiring for visible alarms if they are served by audible alarms, and those that are 1,000 square feet or more must have compliant common use circulation paths.

Where can one get further information or technical assistance on the IBC, including its requirements for means of egress?

Technical assistance on the IBC is available from the International Code Council (ICC) at (888) ICC-SAFE (422-7233) or by email at CareCenter@iccsafe.org. For further information, visit the ICC's website at www.iccsafe.org.