Elevators and Platform Lifts

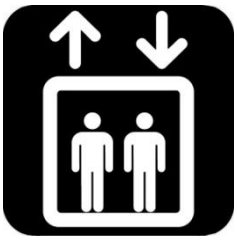

This guide explains criteria for elevators and platform lifts in the ADA Standards.

Required Compliance [§206.6]

Elevators are the typical means of providing an accessible route between stories and to mezzanines. In facilities not required to have an accessible route between stories or to mezzanines (see the Accessible Routes guide), a limited-use/ limited-application (LULA) elevator is permitted. LULAs also are allowed as an alternative to platform lifts and private residence elevators.

Facility or Space	Elevator Type Permitted (if provided instead of ramp)
Facilities required to provide an accessible route to stories/mezzanines	Elevator (§407)
Facilities *not* required to provide an accessible route to stories/mezzanines	Elevator (§407) or LULA (§408)
Residential Dwelling Units	Elevator (§407), LULA (§408), or Private Residence Elevator (§409)
Spaces permitted to be served by a platform lift	Elevator (§407), LULA (§408), or Platform Lift (§410)

Only passenger elevators as classified by the referenced elevator safety code (ASME A17.1) can be used to meet the ADA Standards. Each passenger elevator provided, whether required or not, must comply with the ADA Standards. This includes those elevators that move both passengers and freight, sometimes loosely referred to as "service elevators." Examples include elevators in residential or retail facilities that are regularly used by tenants or customers but that are also used to move furniture, merchandise, or other freight.

Freight elevators cannot be used to satisfy the requirement for an accessible route between floors. Freight elevators are defined by the ASME A17.1 code as those elevators "used primarily for carrying freight and on which only the operator and the persons necessary for unloading and loading the freight are permitted to ride." Where provided, they are not required to meet the ADA Standards. Construction elevators, like other structures directly associated with the actual processes of construction, are exempt (§203.2).

ASME A17.1 Code [§407.1]
Elevators, including LULA and private residence elevators, must meet the ASME A17.1 Safety Code for Elevators and Escalators. The ADA Standards currently require compliance with the A17.1-2000, including the 2002 and 2003 addenda. This edition must be followed until the Standards are updated to reference a later edition of the ASME A17.1 code. In the interim, compliance with a later edition of the ASME A17.1 (now ASME A17.1/CSA B44) may be possible under the provision for "equivalent facilitation" (§103) only if it is comparable to, or stricter than, the referenced edition. Questions about the ASME A17.1 code should be directed to the American Society of Mechanical Engineers (www.asme.org).

Elevator Landing Requirements [§407.2]

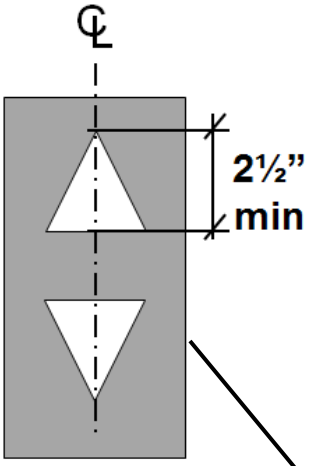

Hall Signals (§407.2.2)

- *Required at each hoistway (including elevators with only 2 stops)*
- *Indicate car arrival and travel direction (separate fixtures are not required to indicate direction)*
- *Visible indicators can be vertical or side-by-side*
- *Visible from area of hall call button, including those in cars (1 in-car lantern is acceptable if visible from the hall call button)*
- *Audible signals: one (up)/ two (down) or annunciator*
- *Frequency: 1500 Hz max. (300 – 3,000 Hz verbal annunciator)*
- *Signal level: 10 dB min. above ambient, 80 dB max.*

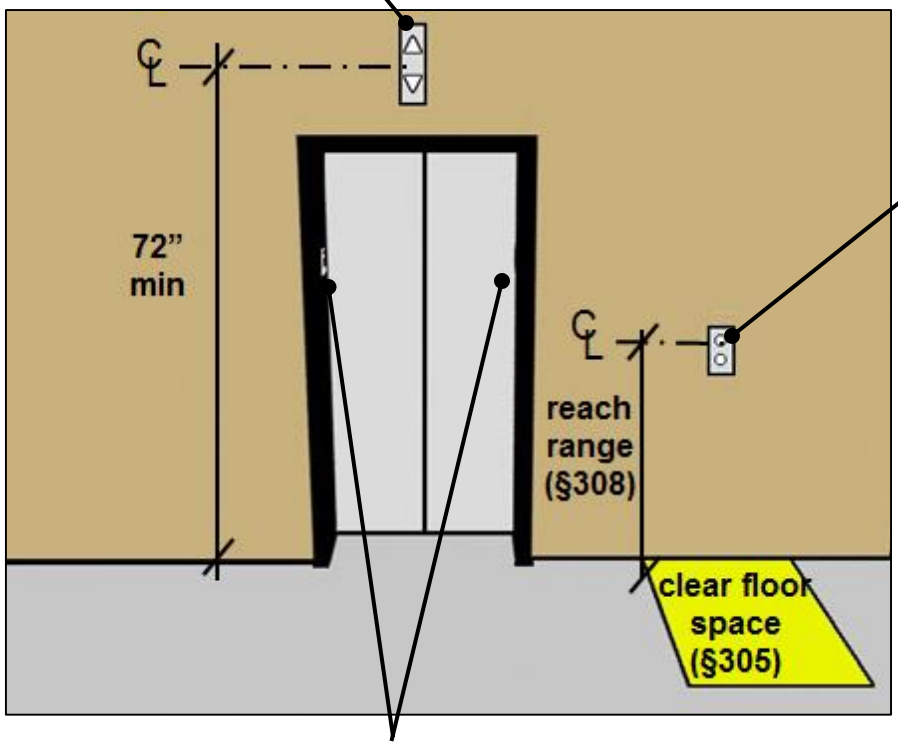

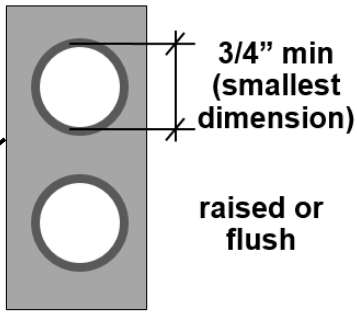

Call Controls (§407.2.1)

- *Within reach range, measured to centerline of highest operable part*
- *Compliant as operable part*
- *Up button above down button*
- *Visual indication of call registered and call answered*
- *Raised from, or flush with, faceplate or, if provided, trim ring or ferrule*

Hoistway Signs (§407.2.3)

- *Both jambs, 48" – 60" AFF (measured to raised character baseline)*
- *Characters and symbols raised 1/32" min., sans serif*
- *Compliance with other requirements in 703.2 for raised characters (upper case, style ,character proportion and spacing, stroke thickness, and line spacing)*
- *Grade II braille complying with 703.3 below raised characters*
- *Tactile star with braille ("MA'IN'") required on both jambs at the main entry level*

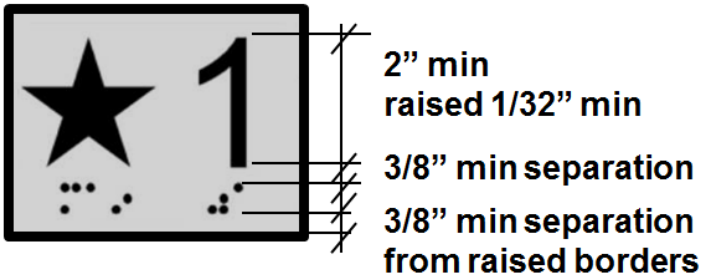

Elevator Door Requirements [§407.3]

Door and Signal Timing (§407.3.4)

Timing begins at audible and visible notification of car arrival based on when the signal becomes visible from the specified location point in front of the call button. At elevators with in-car lanterns, timing begins once doors open wide enough for the signal to be visible from this point.

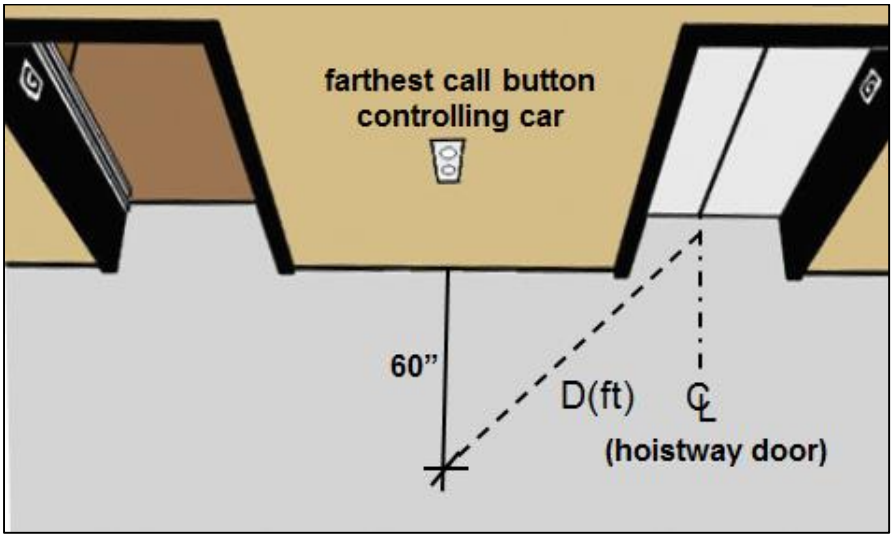

Minimum timing from car arrival notification to start of door closing: D / 1.5 ft/s (no less than 5 sec.)

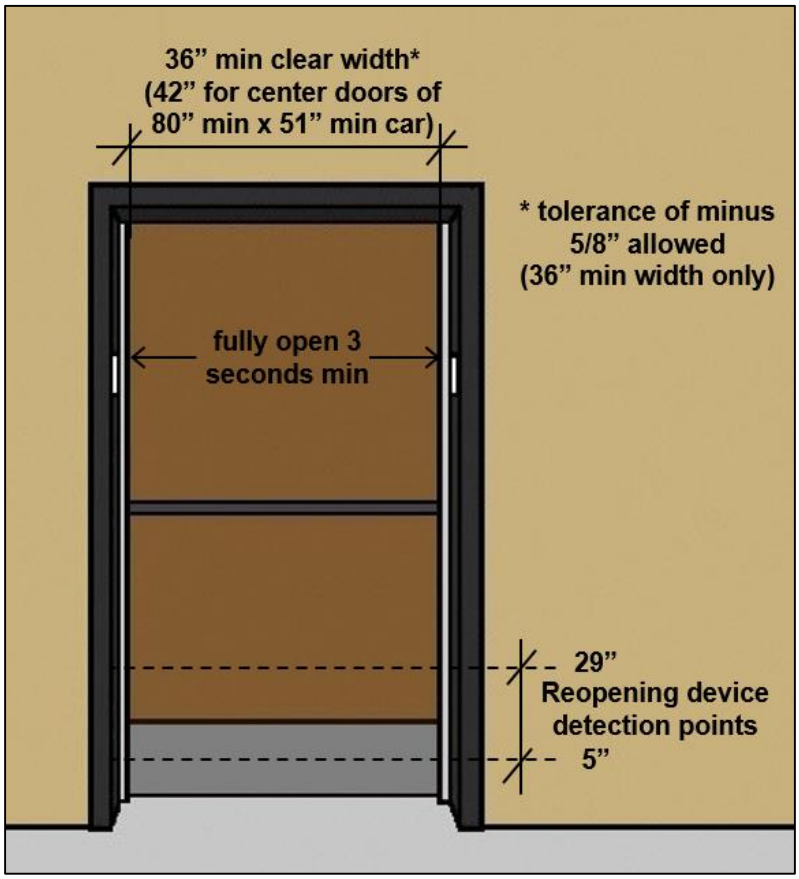

Door Delay (§407.3.5)

- *Doors must remain fully open 3 seconds min. in response to a call*

Reopening Device (§407.3.3)

- *Cannot require physical contact (but contact can occur before door reverses)*
- *Doors do not have to fully reopen*
- *Must be effective for at least 20 seconds while obstructed, but can close sooner if unobstructed or upon user activation of door close. Automatic operation or user activation cannot reduce the minimum open time (3 sec.) or door and signal timing, but can control reopening time.*

Elevator Car Requirements [§407.4]

The ADA Standards specify the minimum car dimensions. Alternative configurations that provide unobstructed wheelchair turning space (60” diameter circle or T-turn) with the doors closed are permitted.

Elevator Car Dimensions (§407.4.1)

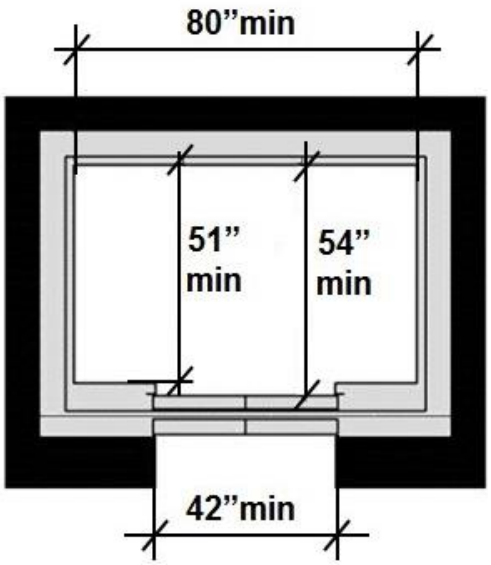

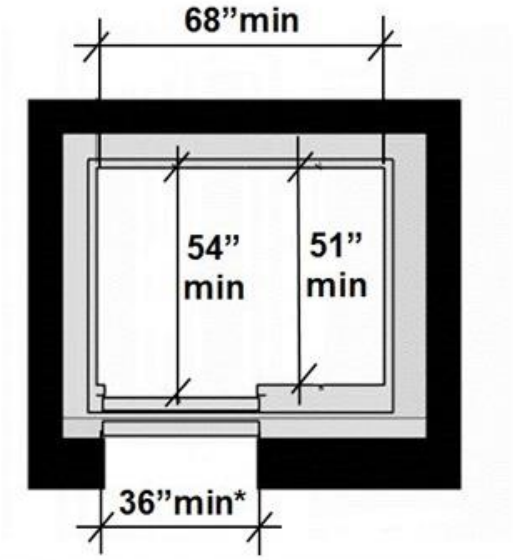

*a tolerance of minus 5/8” permitted

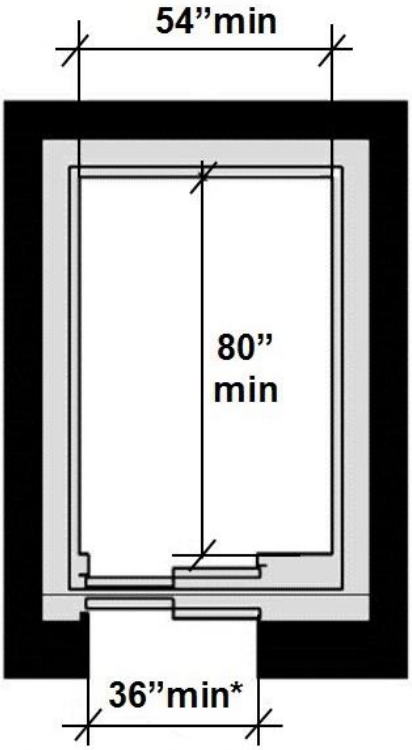

*a tolerance of minus 5/8” permitted

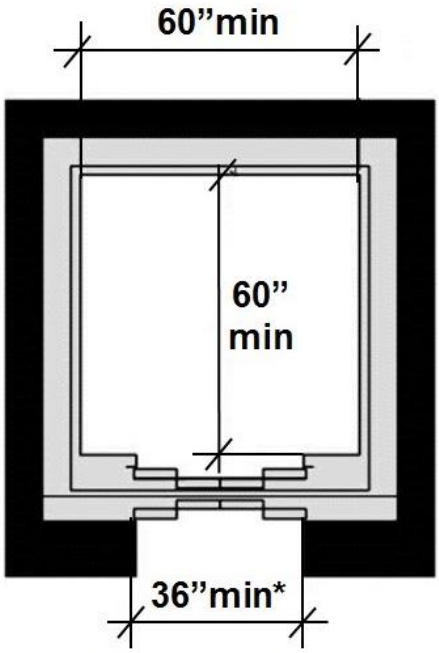

*a tolerance of minus 5/8” permitted

Elevator Car Requirements [§407.4.2 – §407.4.5]

Other requirements for elevator cars include:

- compliant floor surfaces
- a maximum 1¼" horizontal clearance between car platform sill and hoistway landing
- a self-leveling feature
- 5 ft. candles min. illumination at platform, controls, threshold, and landing sill

Car Leveling and Platform to Hoistway Clearance

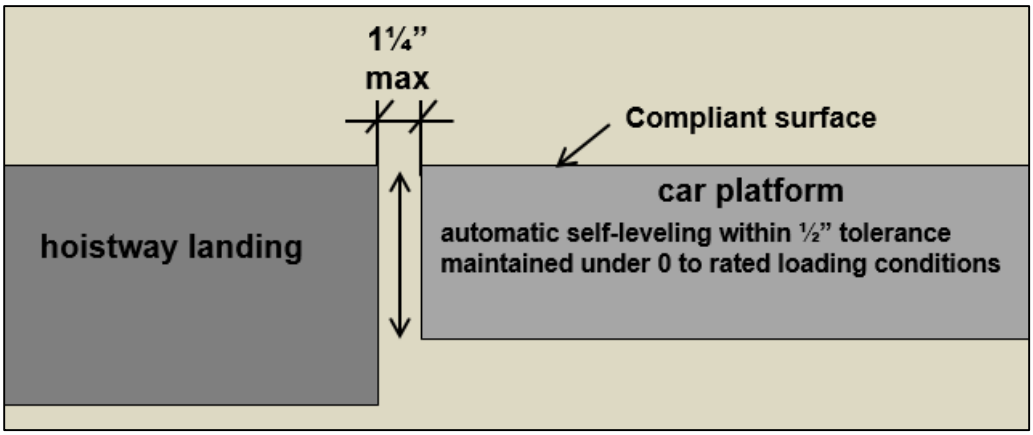

Car Controls [§407.4.6 and §407.4.7]

If more than one car control panel is provided in a car, both must comply (except in existing cars where only 1 panel must comply).

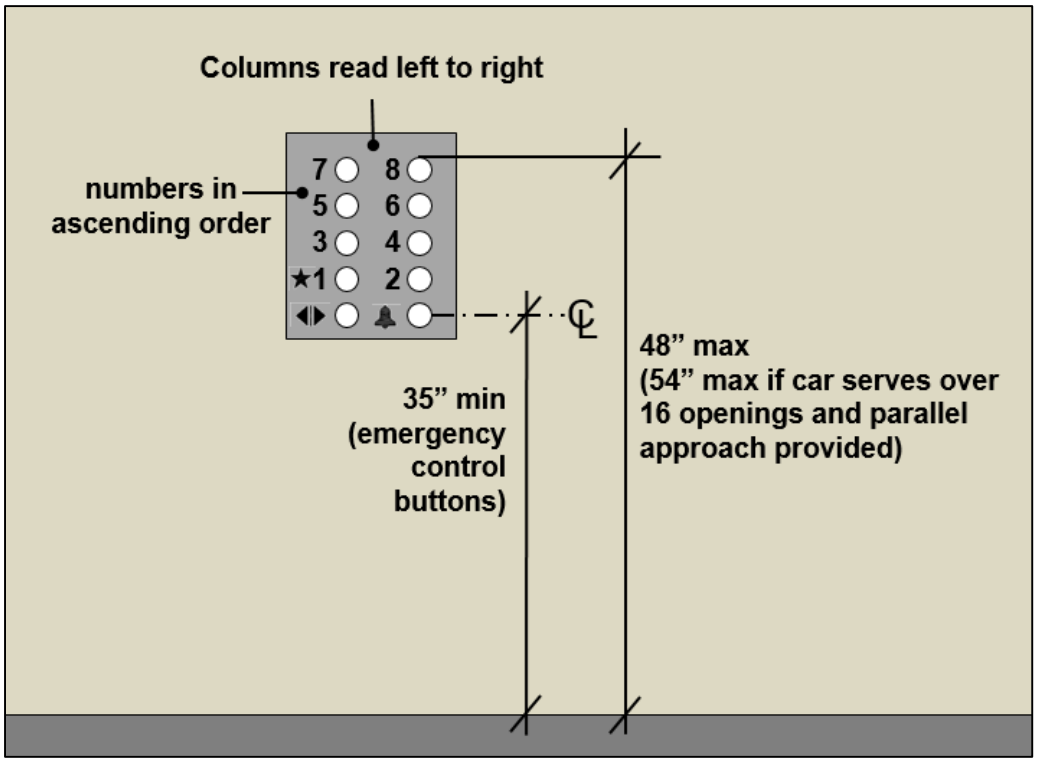

Car Controls (§407.4.6 and §407.4.7)

Raised characters to immediate left of button, raised 1/32" min, sans serif (sufficient color contrast from the background is recommended)

Buttons raised from or flush with faceplate/ trim ring (ferrule)

5/8" – 2"

3/4" min (smallest dimension)

Floor designation buttons provide visual indication of registered call that extinguishes upon car arrival

3/16" min

Braille (Grade 2) below or next to raised characters or symbols

Main Entry Floor (required tactile symbol with braille)

Door open and close buttons, where provided, identified by required tactile symbols and braille and located above emergency buttons

Emergency buttons (alarm and, where provided, emergency stop) grouped at bottom 35" min AFF measured to button centerline and identified by required tactile symbols and braille

Emergency stop (where provided on existing panels – no longer permitted by the ASME A17.1 code)

In-car switches not for passenger use (e.g., fireman's operations) are not required to comply

Keypads (§407.4.6.3 and §407.4.7.2)

Keypads, if provided in cars, must comply:

- *Location within reach range, measured to centerline of highest operable part*
- *Standard phone keypad arrangement*
- *Raised or flush buttons, ¾" min. in smallest dimension*
- *Raised dot "5" key (0.025"-0.037" high, 0.118" 0.120" base diameter)*
- *Compliant visual characters (§703.5) centered on button*

Car Position Indicators [§407.4.8]

Position indicators are required for all cars, including those of 2-stop elevators. Specifications include:

- ½" min. character height
- Illumination of each floor level passed or stopped at
- Automatic verbal announcement of stop or non-verbal audible signal of passed floors and stops (if elevator not destination-oriented and has a rated speed of 200 ft./ minute max.)
- Frequency: 300 – 3,000 Hz for verbal annunciator, 1500 Hz max. for non-verbal signal
- Signal level: 10 dB min. above ambient to 80 dB max.

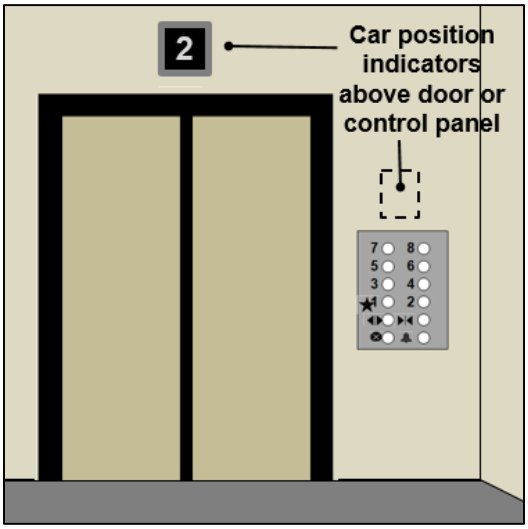

Emergency Communication [§407.4.9]

The ASME A17.1 code requires a two-way means of emergency communication in elevator cars. This system establishes direct communication with authorized personnel and must be activated by a push button. Handsets, which are vulnerable to vandalism, and closed compartments are prohibited. The activating button must be permanently identified by a tactile phone symbol and the term "HELP" located either on or adjacent to the button. Operating instructions are also required.

The ASME A17.1 also requires a visual signal, such as a labeled LED light or lighted jewel, to acknowledge that the emergency call has been received. The visual signal is considered a component of the two-way communication, though voice communication may also be established. The visual indication must be on the same panel as the "HELP" push button and extinguish when a communications link is terminated.

In addition to the ASME requirements, the ADA Standards require that the push button and other device controls comply as operable parts (§309). They also require the push button to be labeled with a specified tactile phone symbol and braille. Operating instructions and other information, including the label for the visible signal, must meet criteria for visual characters but are not required to be tactile.

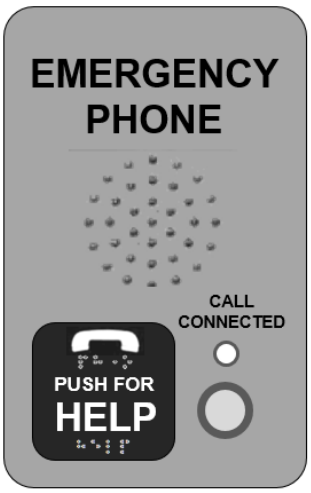

The ASME A17.1 code addresses features of required two-way emergency communication devices, including controls and visual indicators. The ADA Standards apply requirements for operable parts and tactile characters and symbols.

Destination-Oriented Elevators

With destination-oriented elevators, passengers indicate the floor destination when calling an elevator, usually through a keypad. Lobby indicators designate which car to use, which is programmed by the time of arrival. This type of elevator reduces the number of stops per trip. The requirements of §407 apply to destination-oriented elevators, but some provisions or exceptions, which are summarized here, are unique to this type of elevator.

Destination-Oriented Elevators: Call Signals

Passengers indicate floor destination in calling an elevator. A car is designated in response to the call. The assigned car must be indicated both audibly (e.g., "Proceed to Car C") and visually. The visible and audible signals must operate automatically at all times and not require users to activate through a control when needed. Since the desired destination floor is entered in the lobby, traditional floor buttons are not provided on the car operating panel inside the car.

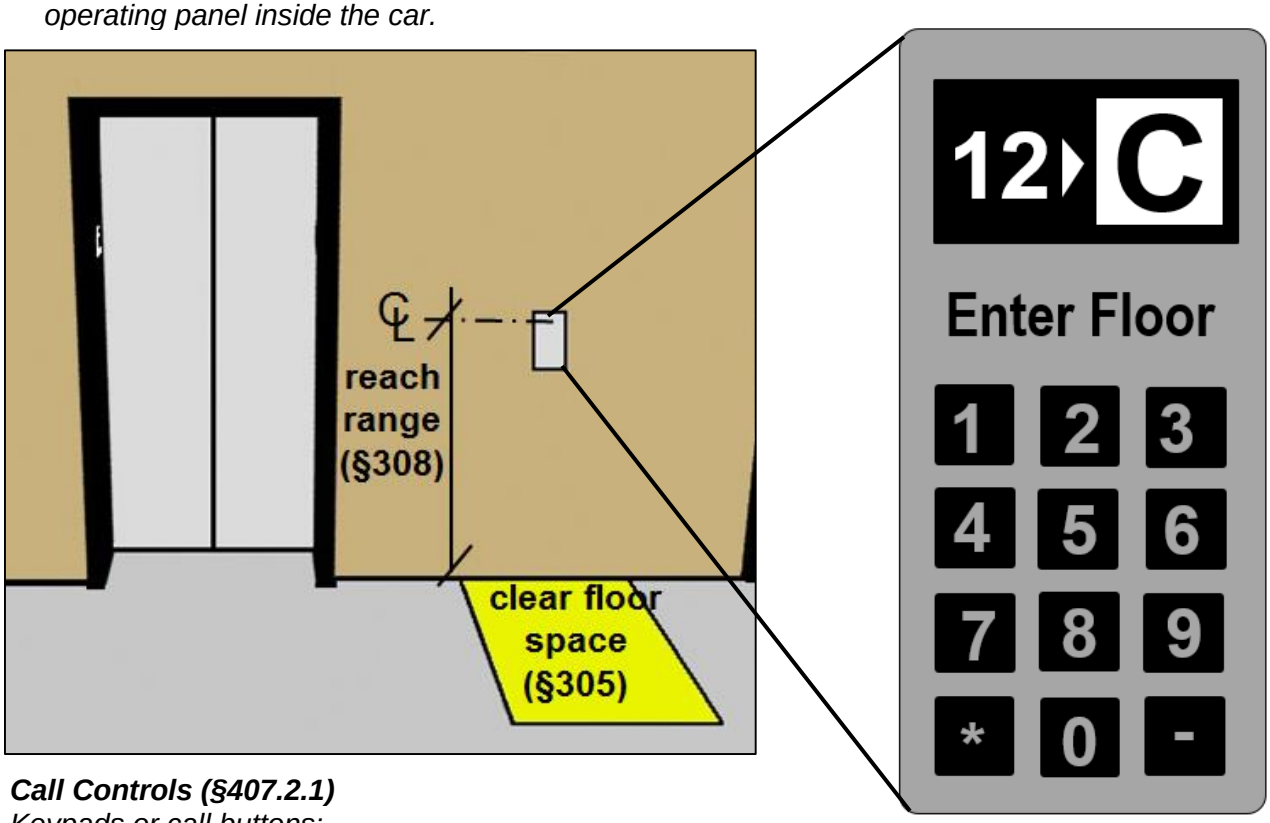

Call Controls (§407.2.1)
Keypads or call buttons:
- *Location within reach range, measured to centerline of highest operable part*
- *Standard phone keypad arrangement*
- *Raised or flush buttons, ¾" min. in smallest dimension*
- *Raised dot "5" key (0.025" - 0.037" high, 0.118" - 0.120" base diameter)*
- *Compliant visual characters (§703.5) centered on button*

Hall Signals (§407.2.2)
- *Frequency: 1500 Hz max.(300 – 3,000 Hz verbal annunciator)*
- *Signal level: 10dB min. above ambient, 80 dB max.*

Destination-Oriented Elevators: Car Arrival

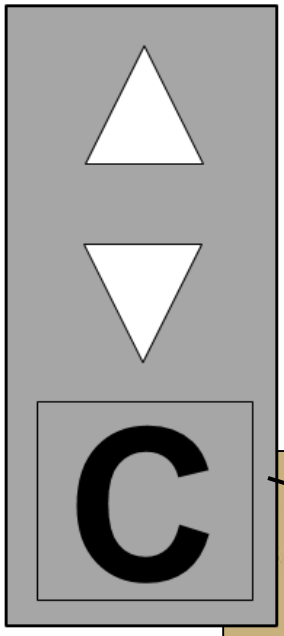

Hall Signals (§407.2.2)

- *Visible and audible signals indicating the arrival of designated car (if the same tone/ announcement in calling a car is used to signal car arrival, then compliance with audible specifications, such as the indication of direction, is not required)*
- *Visible and audible signals are not required at each elevator if they include car designation*
- *Visible signals centered 72" min AFF and visible from floor area adjacent to hoistway entrance*
- *Visible signal element 2 ½" min. measured along vertical centerline of element*
- *Audible and visible differentiation of each elevator in a bank*

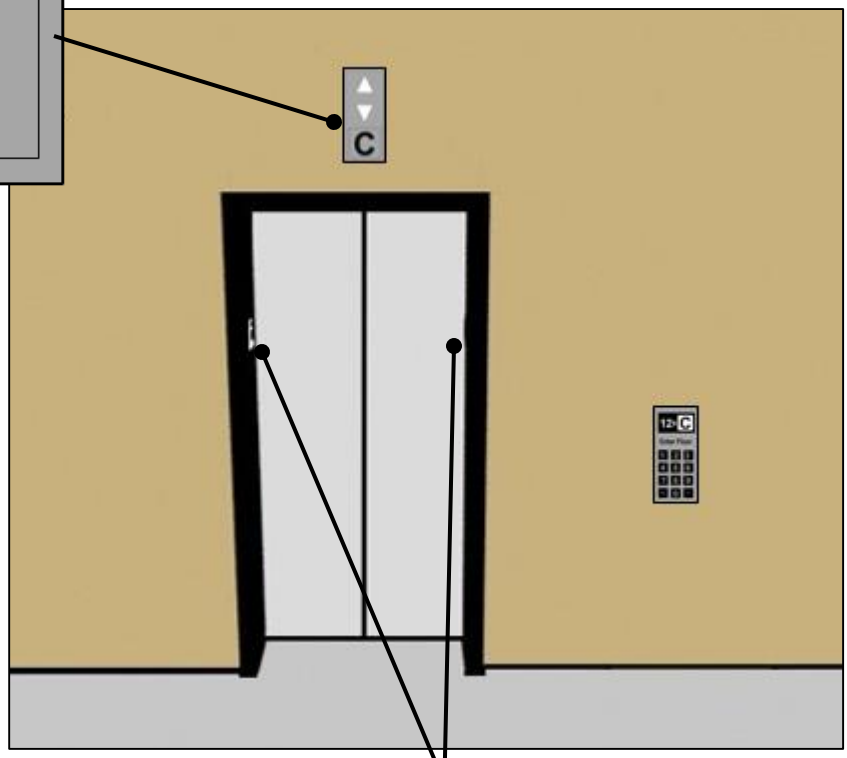

Hoistway Signs (§407.2.3)

- *Both jambs, 48" – 60" AFF (measured to raised character baseline)*
- *Car designation required below floor designation*
- *Characters and symbols raised 1/32" min., sans serif*
- *Compliance with other requirements in 703.2 for raised characters (upper case, style ,character proportion and spacing, stroke thickness, and line spacing)*
- *Grade II braille complying with 703.3 below raised characters*

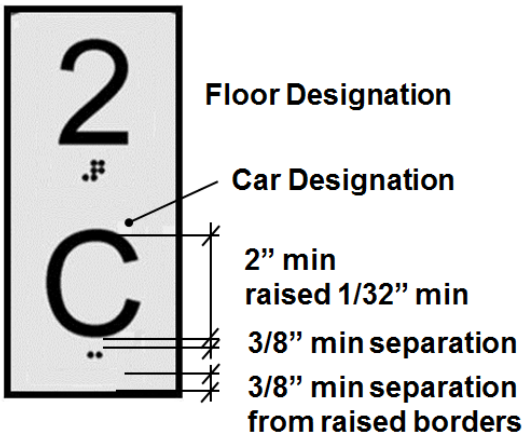

Other provisions unique to destination-oriented elevators:

Elevator Door Requirements (§407.3)

- *Specifications for door and signal timing do not apply (§407.3.4, Ex. 2)*

Car Position Indicators (§407.4.8)

- *Visual display of each floor a car has been programmed to stop at and automatic verbal announcement of each car stop are required*
- *Visual indicators: ½" min. character height, location above control panel/keypad or door, must extinguish when call answered*
- *Automatic verbal announcement (300 – 3,000 Hz, 10dB min. above ambient to 80 dB max.)*

Existing Elevators (Alterations)

Alterations to Existing Elevators

The Standards apply to existing elevators that are altered. Compliance is determined by the scope of the project. For example, if a car operating panel is upgraded, at a minimum the new panel must comply. Other elements of a car that are not altered are not required to comply. Alterations made to an existing car also must be made to each elevator programmed to respond to the same hall call so that a consistent level of accessibility within banks is maintained.

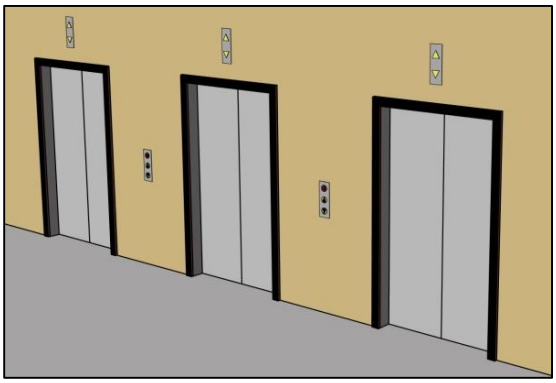

When an alteration is made to an existing car, it also must be made to all other cars that respond to the same hall call.

Requirements for new elevators are also applied to those that are altered, but specific exceptions or alternative specifications are permitted for existing elevators that are altered. These provisions unique to existing elevators are summarized here. In addition, altered elevators must meet applicable sections of the referenced A17.1 code that apply to alterations.

Provisions or exceptions specifically for existing elevators do not apply to elevators that are newly added to an existing facility which must comply with the requirements for new elevators. Certain alterations or additions to a facility may trigger the requirement for an accessible route between floors, including:

- where stairs or escalators are added in an alteration or addition where none existed previously and major structural modifications are necessary, an accessible route must connect each level served by the new stair or escalator (§206.2.3.1);
- as needed to provide an accessible path of travel to a primary function area that is altered or that is part of an addition, unless the cost is more than 20% of the overall cost (§202.4).

Provisions or Exceptions Specific to Existing (Altered) Elevators

Hall Signals (§407.2.2)

- *Visible signals are not required to comply and audible signals are exempt from frequency and decibel ranges*
- *Signals do not have to indicate travel direction*

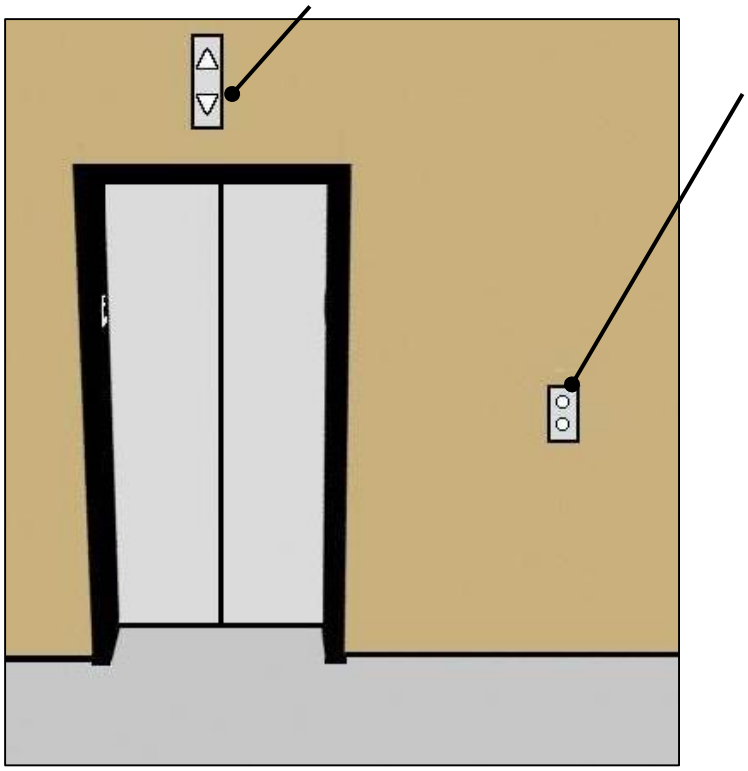

Call Controls (§407.2.1)

- *Call buttons can be recessed*
- *Existing call buttons can be less than ¾" in size and can be located 54" max. (instead of 48") above the floor, measured to the centerline of the highest operable part*

Elevator Door Requirements (§407.3)

- *Existing manually operated doors without reopening devices that meet door requirements (§404.2) are permitted*
- *Power-operated doors can have a narrower clear width (32" min. if the hoistway depth is 24" max.)*

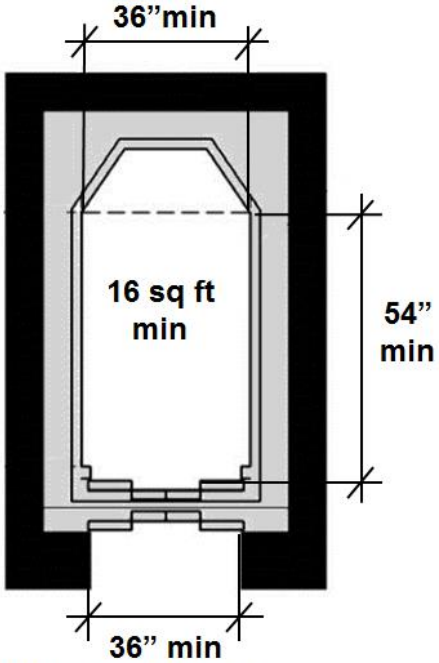

Elevator Car Requirements (§407.4)

- *Existing cars with a clear depth 54" min., a clear width 36" min., and a clear floor area of 16 sq. ft. are permitted*
- *When new compliant operating panels are installed, existing panels that remain are not required to comply*
- *Car control buttons can be recessed and can be 54" max. above the floor if a parallel approach is provided.*
- *If space does not permit location of tactile markings to the left of control buttons, they can be placed as near to the control as possible*

ISA Designation (§216.7)

In facilities with existing non-compliant elevators, the International Symbol of Accessibility (ISA) must clearly identify those elevators that do meet §407.

Recommendation: For greater usability, make those altered elements covered by an exception fully comply wherever practicable.

Limited-Use/ Limited-Application Elevators [§408]

LULA elevators are passenger elevators that are permitted in facilities where an accessible route between stories or mezzanines is not required and as an alternative to private residence elevators and platform lifts. They cannot substitute for elevators complying with §407 that are required to meet requirements for accessible routes. For the most part, LULAs are held to the same requirements for elevators in §407 and applicable sections of the ASME safety code. However, LULAs have smaller car sizes, slower speeds, shorter travel distances, and alternative types of doors. Besides car size, provisions for LULAs differ from those of §407 in that:

- Hoistway doors can be swinging type (they must open and close automatically, be power-operated, meet requirements for doors and referenced ANSI/BHMA Standards for low-energy doors, and remain open for at least 20 seconds)
- Requirements are not included for door timing and delay or for car position indicators

LULA Car Dimensions (§408.4)

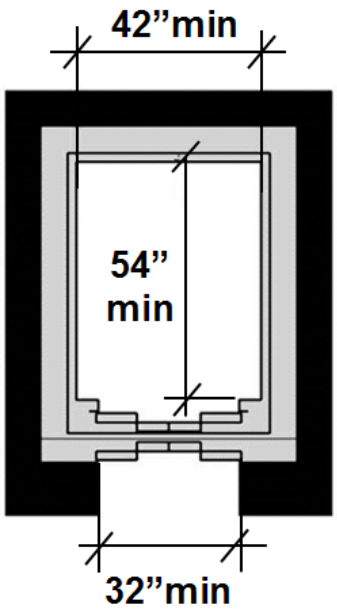

Doors must be located on narrow end

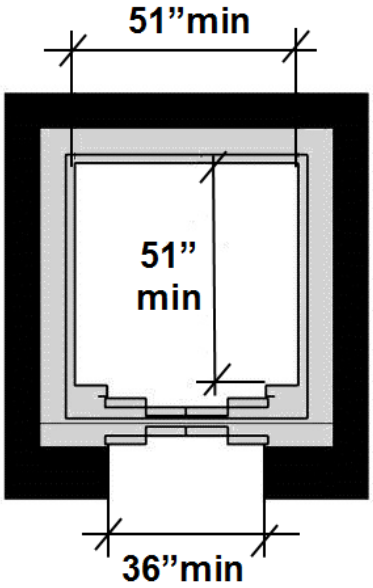

Alternative dimension permitted if the door has a clear width of 36” min.

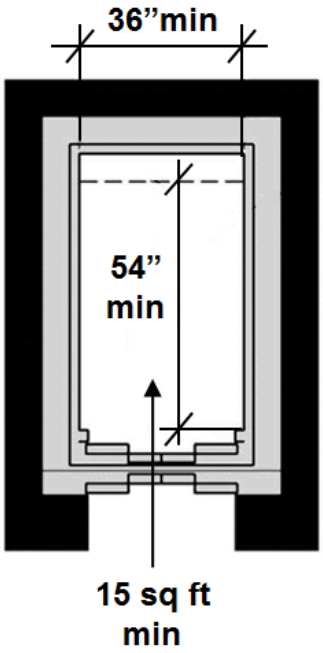

Existing LULA Cars
In alterations to existing cars, a narrower size is permitted for cars with at least 15 sq. ft. of net clear floor area.

Private Residence Elevators [§409]

Private residence elevators are permitted only within a residential dwelling unit or in a multiple dwelling unit facility as a means of access to a single private residence. Elevators in residential facilities not located within or serving individual dwelling units must meet requirements in §407.

General (§409.1)
- *Automatic operation*
- *Compliance with the referenced ASME A17.1 standard*

Call Buttons (§409.2)
- *Compliant as operable parts, including reach range and clear floor space, and ¾" min. in smallest dimension*

Elevator Doors (§409.3)
- *Car and hoistway doors/gates must be power operated and meet the ANSI/BHMA standard for low-energy doors and other applicable provisions for doors in §404 (compliance with maneuvering clearance on push side of doors not required)*
- *Manual-open, self-close doors/gates permitted for cars with more than 1 opening*
- *Required location on narrow end of car*
- *Must remain open for 20 seconds min.*

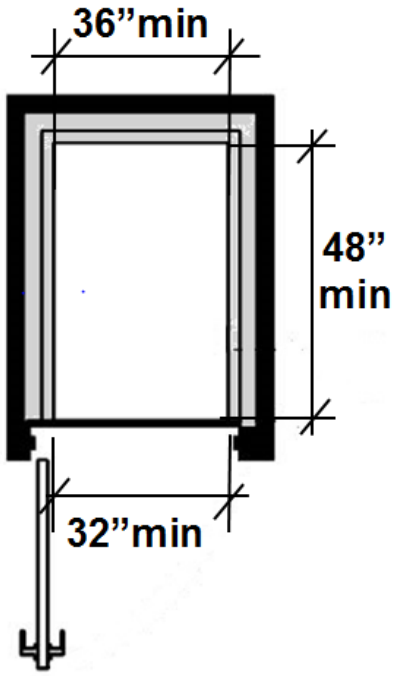

Elevator Cars (§409.4)
- *Inside dimensions: 36" min. by 48" min.*
- *Compliant floor surfaces*
- *1½" max. clearance between platform and edge of landing sill (later editions of the ASME A17.1 specify 1¼" max).*
- *Automatic leveling with floor landing within ½" tolerance under rated to 0 loading conditions*
- *5 ft candles min. at platform, controls, threshold, and landing sill*
- *Car controls must be raised or flush button, ¾" min. in smallest dimension, comply as operable parts, and be located within accessible reach range on side wall 12" min. from any adjacent wall*
- *Telephone and emergency signal two-way communication device required in car with compliant operable parts, including hardware of closed compartment if provided; telephone cord must be 29" long min.*

Platform Lifts

Where Platform Lifts are Permitted [§206.7]

Platform lifts can be part of an accessible route in existing facilities that are altered. In new construction, platform lifts can be used to provide an accessible route to these areas only:

- wheelchair spaces, performance areas, and speakers' platforms
- incidental spaces with a maximum occupancy of 5 that are not for public use
- raised courtroom stations, such as jury boxes, witness Standards, judges' benches, clerks stations and depressed areas such as the well of the court
- levels within transient lodging guest rooms and residential dwelling units
- certain recreation facilities: amusement rides, play areas, team/player seating areas in sports facilities, recreational boating facilities, and fishing piers and platforms

They also are permitted in new construction where topography or other existing exterior site constraints make a ramp or elevator infeasible. While the site constraint must reflect exterior conditions, the lift can be installed in the interior of a building. For example, an exterior or interior platform lift could be used to provide an accessible entrance or to coordinate interior floor levels at a new building constructed between and connected to two existing buildings if there is not sufficient space to coordinate floor levels and also to provide ramped entry from the public way.

Recommendation: In alterations, it is advisable that platforms lifts be used only in instances where a ramp or elevator is technically infeasible or in the locations permitted in new construction.

ASME A18.1 Safety Standard [§410.1]

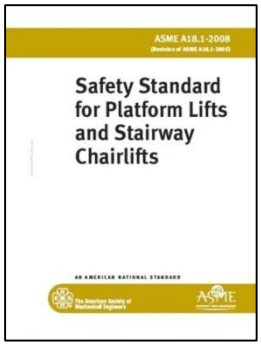

Platform lifts must meet the ASME A18.1 Safety Standard for Platform Lifts and Stairway Chairlifts. The ASME A18.1 covers the design, construction, installation, operation, inspection, testing, maintenance and repair of lifts that are intended for transportation of persons with disabilities. The ADA Standards currently require compliance with the 1999 edition or the 2003 editions of the A18.1 Standard. Either of these editions must be followed until the ADA Standards are updated to reference a later edition of the ASME A18.1 Standard. In the interim, compliance with a later edition of the ASME A18.1 Standard may be possible under the provision for "equivalent facilitation" (§103) only if it is comparable to, or stricter than, the referenced edition. Questions about the ASME A18.1 code should be directed to the American Society of Mechanical Engineers (www.asme.org).

Under the ADA Standards, platform lifts must be independently operable and must allow unassisted entry and exit from the lift. Attendant operation, while allowed by the ASME A18.1 Standard, is prohibited by the ADA Standards. Portable lifts do not satisfy the ADA Standards even when they comply with ASME A18.1.

The ASME A18.1 Standard addresses requirements for runway enclosures, electrical equipment and wiring, structural support, headroom clearance (80” minimum), access ramps, pits, and other features. The ASME A18.1 Standard recognizes two types of platform lifts: vertical platform lifts and inclined platform lifts. Lifts without platforms, including stairway chairlifts, are not permitted by the ADA Standards except at swimming pools and spas because they require transfer from wheeled mobility aids. (Specifications for pool lifts include a fixed seat and footrests, but not a platform (§1009.2)).

Vertical Platform Lift

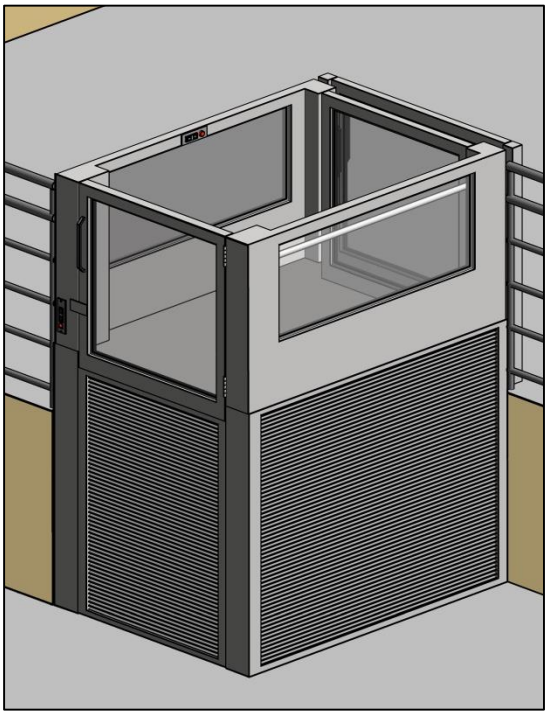

The ASME A18.1 Standard specifies platform and runway enclosures for vertical platform lifts, among other features, and limits the travel distance. The size of platforms cannot exceed 18 sq. ft.

Inclined Platform Lift

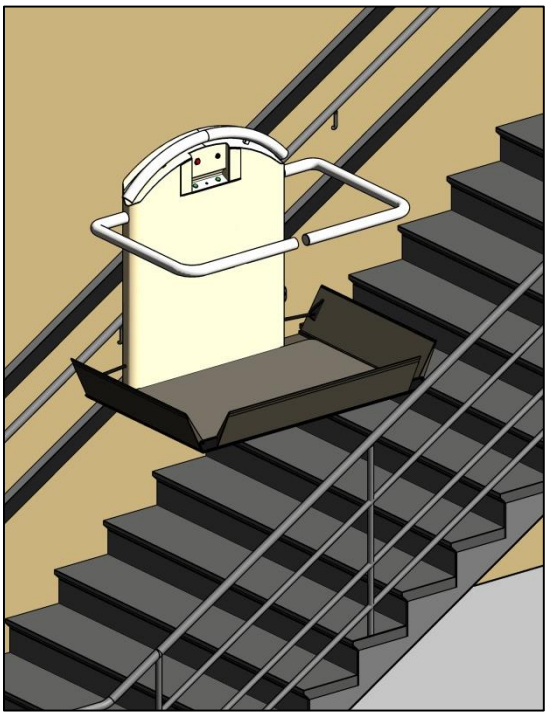

Inclined platform lifts can have a folding platform and are typically located at stairways. They must be installed so they do not encroach on required means of egress. Passenger retaining arms are permitted as an alternative to a platform enclosure under the ASME A18.1 Standard.

Requirements for Platform Lifts

Platforms (§410.2 - §410.4)
Platforms must meet requirements for clear floor space and floor surfaces, including changes in level, and the clearance between the platform sill and edge of runway landing cannot exceed 1¼" (ASME A18.1 specifies 3/8" – 3 /4").

Doors and Gates §410.6)
Doors and gates must be power-operated, meet criteria for low-energy doors, including the referenced ANSI/BHMA standard (§404.3), and remain open for at least 20 seconds. (Self-closing manual types are allowed at lifts with no more than 2 stops and doors/ gates on opposite ends.)

Standby Power (§207.2)
Platform lifts permitted to be part of an accessible means of egress by the referenced editions of the International Building Code must be equipped with standby power.

Operable Parts (§410.5)
Controls must meet requirements for operable parts, including reach ranges.

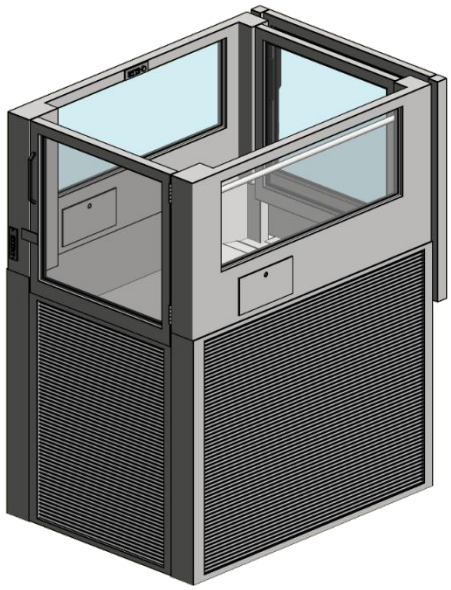

Platform Lift Clear Floor Space and Doors/ Gates

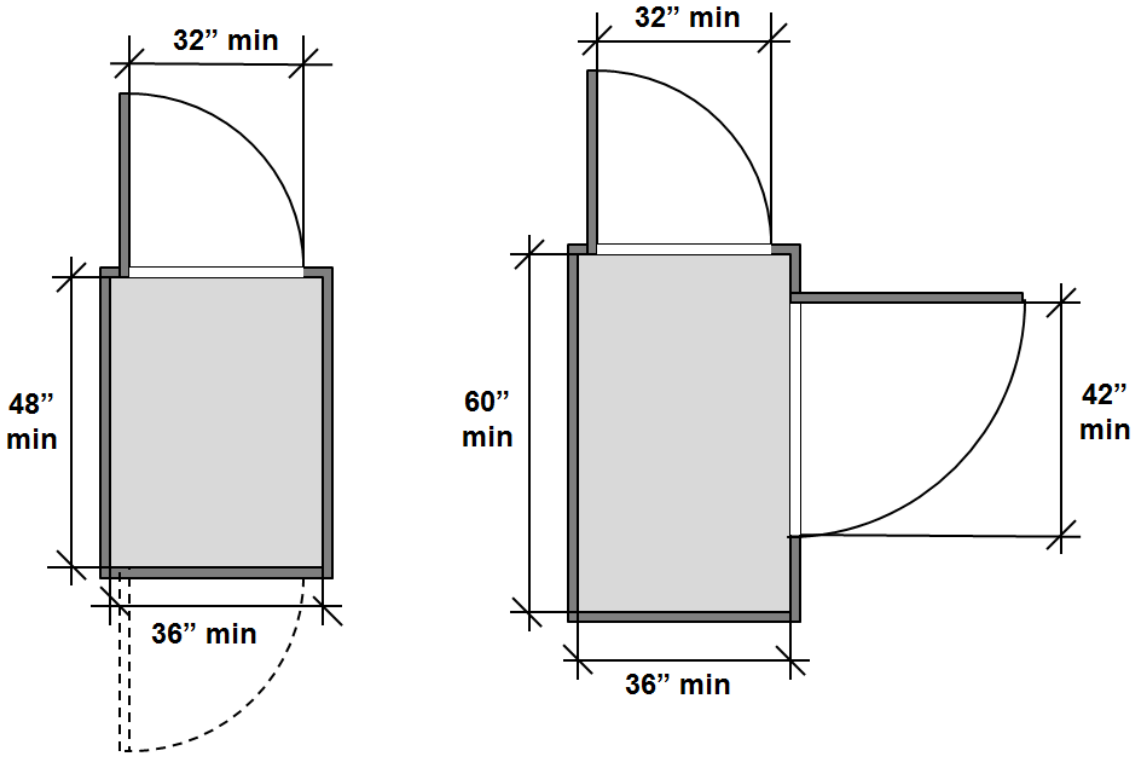

The clear floor space of platforms must be 36" wide min. If doors/gates are on the narrow end only, the length is 48" min. If a door/gate is on the longer side, the min. length is 60" to accommodate side approach maneuvering.

Common Questions

Elevators

Are freight or service elevators required to comply?

When an elevator is used to provide a required accessible route between stories, it must meet requirements for passenger elevators. Elevators that serve passengers but can also be used to move freight, sometimes referred to as “service elevators,” must meet the ASME requirements for passenger elevators. Examples include elevators in residential or retail facilities that are regularly used by tenants or customers but that are also used to move furniture, merchandise, or other freight. Where provided, they must comply with the Standards.

Freight elevators, on the other hand, are defined by the ASME A17.1 code as those elevators “used primarily for carrying freight and on which only the operator and the persons necessary for unloading and loading the freight are permitted to ride.” Freight elevators cannot be used in lieu of a passenger elevator to provide an accessible route between stories or mezzanines. Where provided, freight elevators are not required to comply with the Standards.

Can elevator doors close sooner than the minimum opening time specified when users activate door close?

User activation of door close (or automatic operation) cannot reduce the initial opening time of doors (3 seconds minimum) or the minimum door signal timing (based on 1.5/ ft/s travel speed for the distance from the hall call button to car door centerline). When doors automatically reopen due to a detected obstruction, they can begin to reclose when no longer obstructed. The 20 second minimum pertains to the length of time the sensory reopening device remains effective, not necessarily the length of time doors remain open.

Must elevator doors remain open for 20 seconds?

LULA swing doors, private residence elevator doors, and platform lift gates and doors must remain open for 20 seconds minimum. This does not apply to the doors of passenger elevators complying with §407 which must remain fully open for at least 3 seconds in response to a call (§407.3.5). The opening time is further determined by the travel distance from hall call buttons and signal timing based on a 1.5 ft/s travel speed beginning from audible and visible signalization of car arrival (§407.3.4). Reopening devices must remain effective for 20 seconds minimum, but in reopening, doors do not have to remain open for this length of time if unobstructed.

Are access key, card, or code entry systems permitted in elevators?

Yes, but fixed features of such systems must comply as operable parts. For example, card readers must be located within accessible reach ranges. Non-fixed portions, including keys and access cards issued to users, are not required to comply. (Where use of stairs between levels served by an elevator is unrestricted, use of the elevator should not be restricted to key holders.)

Can audible signals for an elevator operate only when needed by a passenger who needs them through activation of dedicated "accessibility" control?

No, audible (and visible) signals required for elevators must function automatically at all times an elevator is operational. Requiring passengers to manually activate such signals when needed is not permitted by the ADA Standards.

Can hall and in-car signals be displayed horizontally (i.e., side-by-side) instead of vertically (i.e., one above the other)?

Yes, hall signs can be displayed horizontally instead of vertically. However, with call buttons, the button designating the up direction must be located above the one indicating the down direction (§407.2.1.4).

Are handrails required in elevator cars?

The ADA Standards do not require handrails in elevators cars. If they are provided, they are not required to comply with requirements in the ADA Standards for handrails (§403.6, Advisory).

Can a more recent edition of the ASME A17.1 Safety Code for Elevators and Escalators (or the ASME A18.1 Safety Standard for Platform Lifts and Stairway Chairlifts) be used instead of the editions referenced in the Standards?

The specific editions of the ASME A17.1 and ASME A18.1 codes referenced by the ADA Standards are to be followed (although the Access Board intends to update references to keep them current). Compliance with a later edition may be possible under the provision for "equivalent facilitation" (§103) if it is comparable to, or stricter than, the referenced editions.

Platform Lifts

Are stairway chairlifts permitted?

No, stairway chairlifts cannot be used where platform lifts are permitted by the ADA Standards (§206.7) although they are addressed by the ASME A18.1 Standard. Chairlifts require transfer to a fixed seat from wheeled mobility aids and thus are not

independently usable. Platform lifts can be equipped with seats, including those that fold, but they must be located outside the minimum clear area specified for platforms which are sized to accommodate wheeled mobility aids.

Can platform lifts be locked?

The Standards require “unassisted” entry and exit from lifts (§410.1). Situations in which platform lifts are locked and require users to request or retrieve a key for operation will not satisfy this requirement for independent operation. Platform lifts can be locked during those times when the space or facility they serve is closed.

Can lifts be attendant-operated?

Attendant operation, although recognized by the ASME A18.1 Standard, is expressly prohibited by the ADA Standards. Platform lifts must provide “unassisted entry and exit from the lift” (§410.1).

Can platform lifts be portable or provided after construction as an adaptation?

Platform lifts must be permanent and installed at the time of construction or alteration with few exceptions. Platform lifts can be provided after construction only to provide access to raised work stations in courtrooms (sufficient space and electrical service must be provided in design to facilitate installation). Only platform lifts serving temporary structures can be temporary or portable.